K4AHZ TM 11-851

DEPARTMENT OF THE ARMY TECHNICAL MANUAL

K4AHZ

RADIO SET SCR-244-D

AND

RADIO RECEIVERS R-274A/FRR, R-274C/FRR R-320A/FRC, R-483/FRR AND R-483A/FRR

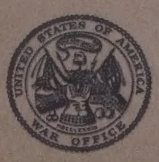

DEPARTMENT OF THE ARMY • OCTOBER 1953

3-18-47

TECHNICAL MANUAL
No. 11-851

DEPARTMENT OF THE ARMY
WASHINGTON 25, D. C., *5 October 1953*

RADIO SET SCR-244-D AND RADIO RECEIVERS R-274A/FRR, R-274C/FRR, R-320A/FRC, R-483/FRR, AND R-483A/FRR

	Paragraphs	Page
CHAPTER 1. INTRODUCTION		
Section I. General	1, 2	7
II. Description and data	3–20	7
CHAPTER 2. OPERATING INSTRUCTIONS		
Section I. Service upon receipt of Radio Set SCR-244-D	21–26	24
II. Controls and instruments	27, 28	32
III. Operation under usual conditions	29–32	35
IV. Operation under unusual conditions	33–36	39
CHAPTER 3. ORGANIZATIONAL MAINTENANCE INSTRUCTIONS		
Section I. Organizational tools and equipment	37, 38	41
II. Preventive maintenance services	39–42	41
III. Lubrication and weatherproofing	43–47	46
IV. Troubleshooting at organizational maintenance level	48–52	47
CHAPTER 4. THEORY	53–75	53
CHAPTER 5. FIELD MAINTENANCE INSTRUCTIONS		
Section I. Trouble shooting at field maintenance level	76–89	88
II. Repairs	90–92	131
III. Alinement procedures	93–101	147
IV. Final testing	102–119	154
CHAPTER 6. SHIPMENT AND LIMITED STORAGE AND DEMOLITION TO PREVENT ENEMY USE		
Section I. Shipment and limited storage	120, 121	160
II. Demolition of materiel to prevent enemy use	122, 123	160
APPENDIX I. REFERENCES		161
II. IDENTIFICATION TABLE OF PARTS		163
INDEX		194

K4AHZ

Bi Bell

WARNING

HIGH VOLTAGE

is used in the operation
of this equipment

DEATH ON CONTACT

may result if operating personnel
fail to observe safety precautions

ARTIFICIAL RESPIRATION

GENERAL PRINCIPLES

1. Seconds count! Begin at once! Don't take time to move the victim unless you must. Don't loosen clothes, apply stimulants or try to warm the victim. Start resuscitation! Get air in the lungs! You may save a life!

2. Place the victim's body in a prone position, so that any fluids will drain from the respiratory passages. The head should be extended and turned sideward *never flexed forward;* the chin shouldn't sag, since obstruction of the respiratory passages may occur.

3. Remove any froth or debris from the mouth with your fingers. Draw the victim's tongue forward.

4. Begin artificial respiration. Continue it rhythmically and without any interruption until natural breathing starts or the victim is pronounced dead. Try to keep the rhythm smooth. Split-second timing is not absolutely essential.

5. When the victim starts breathing, or when additional help is available loosen the clothing; remove it, if it's wet; keep the victim warm. Shock should receive adequate attention. Don't interrupt the rhythmical artificial technique for these measures. Do them only when you have help or when natural breathing has started.

6. When the victim is breathing, adjust your timing to assist him. Don't fight his efforts to breathe. Synchronize your efforts with his. After resuscitation, keep him lying down until seen by a physician or until recovery seems certain.

7. Don't wait for mechanical resuscitation! If an approved model is available, use it, but, since mechanical resuscitators are only slightly more effective than properly performed "push-pull" manual technique, *never* delay manual resuscitation for it.

BACK-PRESSURE ARM LIFT METHOD

1. *Position of Victim.* Place the victim in the prone (face-down) position. Bend his elbows; place one hand upon the other. Turn his face to one side, placing his cheek upon his hands.

2. *Position of Operator.* Kneel on your left or right knee, at the victim's head, facing him. Your knee should be at the side of the victim's head close to his forearm, your foot should be near his elbow. Kneel on both knees if you find it more comfortable, with one knee on each side of the head. Place your hands on the flat of the victim's back so that their heels are just below the lower tip of his shoulder blades. With the tip of your thumbs touching spread your fingers downward and outward. (See A)

3. *Compression Phase.* Rock forward until your arms are approximately vertical and allow the weight of the upper part of your body to exert a slow, steady, even, downward pressure upon your hands. This forces air out of the lungs. Keep your elbows straight and press almost directly downward on the back. (See B)

4. *Expansion Phase.* Release the pressure, avoid any finish thrust, and commence to rock backward slowly. Place your arms upon the victim's arms just above the elbows, and draw his arms upward and toward you. Apply just enough lift to feel resistance and tension at the victim's shoulders.

Don't bend your elbows. As you rock backward, the victim's arms will be drawn toward you. (The arm lift expands the chest by pulling on the chest muscles, arching the back and relieving the weight on the chest.) Drop the arms gently to the ground or floor. This completes the cycle. (See C and D). Now, repeat the cycle.

5. *Cycle Timing and Rhythm.* Repeat the cycle 10 to 12 times per minute. Use a steady uniform rate of Press, Release, Lift, Release. Longer counts of about equal length should be given to the "Press" and "Lift" steps of the compression and expansion phases. Make the "Release" periods of minimum duration.

6. *Changing Position or Operator.*

(*a*) Remember that you can use either or both knees or can shift knees during the procedure, provided you don't break the rhythm. Observe how you rock forward with the back-pressure and backward with the arm-lift. The rocking motion helps to sustain the rhythm and adds to the ease of operation.

(*b*) If you tire and another person is available, you can "take turns." Be careful not to break the rhythm in changing. Move to one side and let your replacement come in from the other side. Your replacement begins the "Press-Release" after one of the "Lift-Release" phases, as you move away.

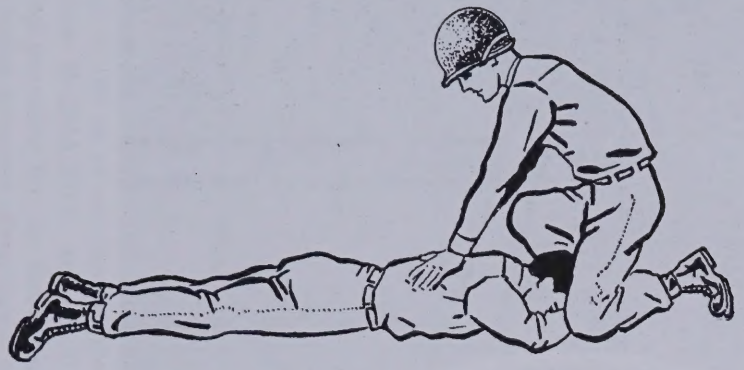

A Position of operator and victim

B Compression phase

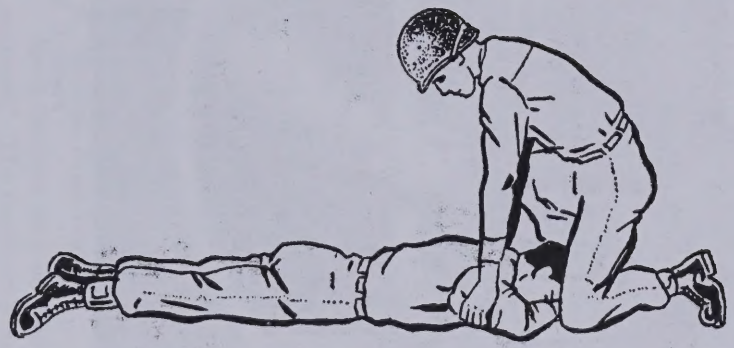

C Expansion phase (arm lift)

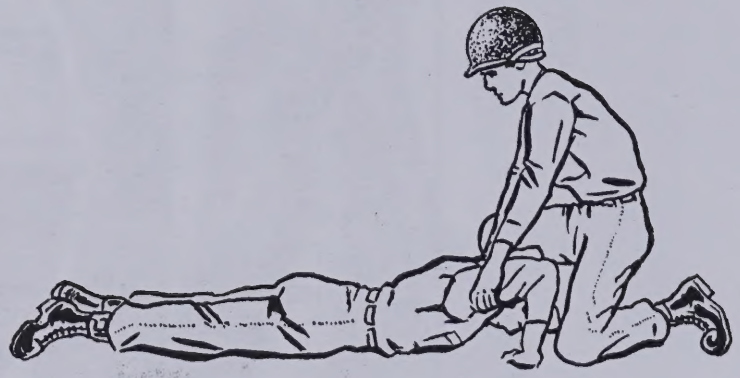

D Expansion phase (arm release)

Figure 1. Radio Set SCR–244–D.

CHAPTER 1

INTRODUCTION

Section I. GENERAL

1. Scope

This technical manual contains instructions for the installation, operation, maintenance, and repair of Radio Set SCR–244–D (which includes either Radio Receiver R–483/FRR or R–483A/FRR), Radio Receiver R–320A/FRC, Radio Receiver R–274A/FRR, and Radio Receiver R–274C/FRR. In addition to these instructions, there are two appendixes covering a list of references and an identification table of parts.

2. Forms and Records

The following forms will be used for reporting unsatisfactory conditions of Army equipment.

a. DD Form 6, Report of Damaged or Improper Shipment, will be filled out and forwarded as prescribed in SR 745–45–5 (Army), Navy Shipping Guide, Article 1850–4, and AFR 71–4 (Air Force).

b. DA 468, Unsatisfactory Equipment Report, will be filled out and forwarded to the Office of the Chief Signal Officer as prescribed in SR 700–45–5.

c. AF Form 54, Unsatisfactory Report, will be filled out and forwarded to Commanding General, Air Materiel Command, Wright-Patterson Air Force Base, Dayton, Ohio, as prescribed in SR 700–45–5 and AFR 65–26.

d. DA AGO Form 11–238, Operator First Echelon Maintenance Check List for Signal Corps Equipment (Radio Communication, Direction Finding, Carrier, Radar), will be prepared in accordance with instructions on the back of the form (fig. 20).

e. DA AGO Form 11–239, Second and Third Echelon Maintenance Check List for Signal Corps Equipment (Radio Communication, Direction Finding, Carrier, Radar), will be prepared in accordance with instructions on the back of the form (fig. 21).

f. Use other forms and records as authorized.

Section II. DESCRIPTION AND DATA

3. Purpose and Use

a. Radio Set SCR–244–D (fig. 1) is a general purpose radio communications receiving set. It is intended for fixed field station use. Radio Receivers R–483/FRR and R–483A/FRR, either of which is included with Radio Set SCR–244–D, and Radio Receivers R–320A/FRC, R–274A/FRR, R–274C/FRR are designed for fixed station or mobile use.

b. Each receiver provides continuous tuning for the selective reception of radio signals within the range of .54 to 54 mc (megacycles). Radio Receivers R–274A/FRR and R–274C/FRR have added provision for the fixed-frequency, crystal-controlled reception of any signal within this range (limited to 1.35 to 29.7 mc, in practice). A-m (amplitude-modulated), c-w (continuous-wave), and F-S (frequency-shift) radio signals may be received. Voice and cw are made intelligible through use of an associated headset or loudspeaker. Automatic highspeed Morse code is made intelligible through the use of a tape ink recorder and auxiliary equipment (par. 4*d* and *f*). Teletypewriter signals are made intelligible through the use of a teletypewriter and auxiliary equipment (par. 4*b* and *c*.).

4. System Application

Each receiver may be used in diversity receiving systems. The receivers may be in close proximity to each other and to other station equipment. Space diversity receiving systems provide for

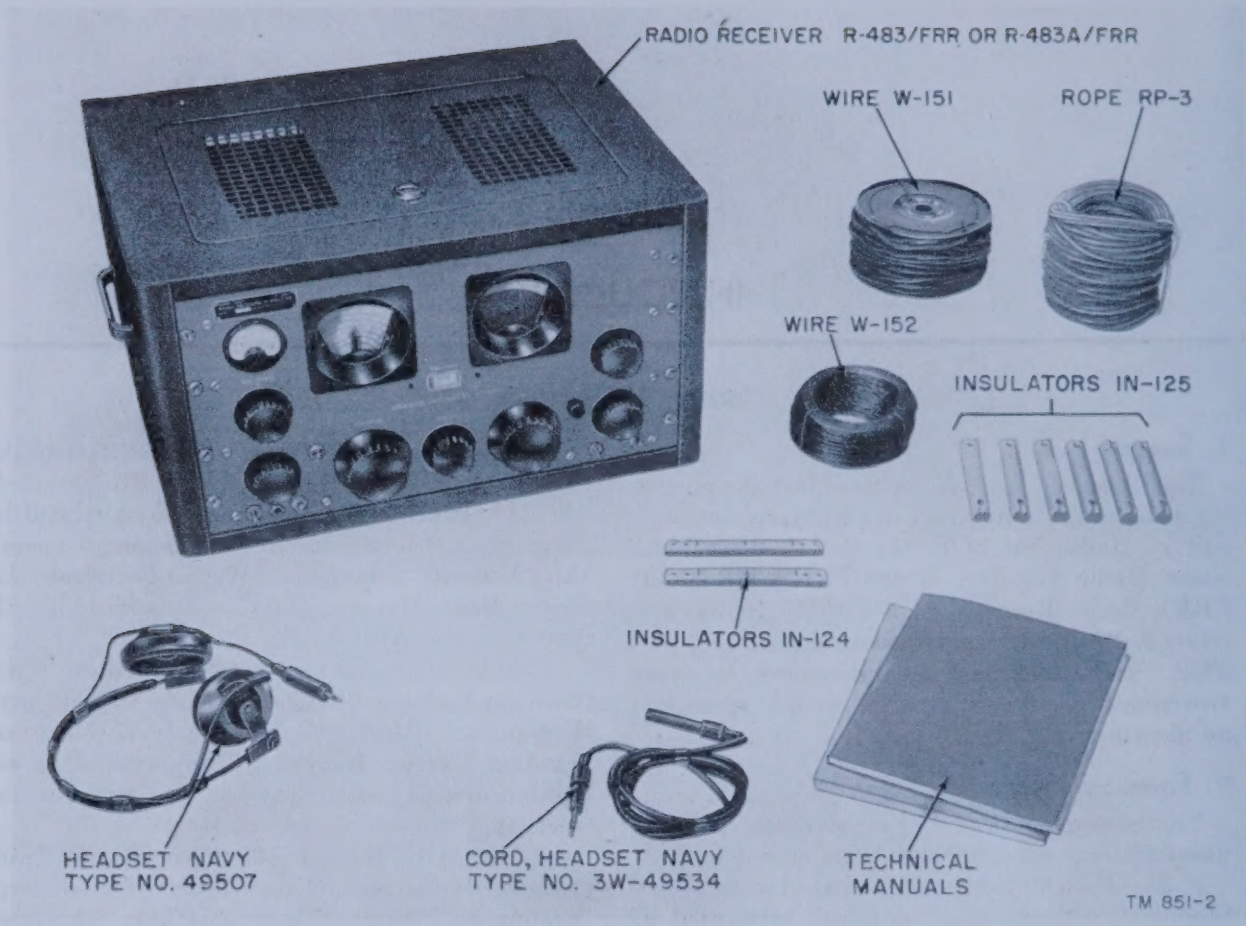

Figure 2. Radio Set SCR-244-D, operating components.

distinct improvements in the reception of h-f (high-frequency) radio signals. They are used to overcome severe signal fading and to maintain the receiver signal-to-noise ratio.

a. A typical fixed field installation employing Radio Receiver R-320A/FRC is shown in figure 3. A signal is received simultaneously on the three antennas and is fed to the receivers, which may be operated as single units or in diversity arrangement, depending on the setting of switches in the keyer. In diversity operation, the receiver having the greatest output is selected automatically to control the keyer output. Diversity output from the keyer is fed through switches in the speaker unit to the audio stages in one of the receivers for amplification before being applied to the speaker. Figure 3 shows the equipment in diversity arrangement using the audio section of receiver No. 1. At any given instant, the output signal of one receiver is dominant and the signals of the other two are suppressed. The signal path is from the dominant receiver to the keyer, from the keyer to the speaker unit, from the speaker unit to receiver No. 1 (as selected by the operator) for audio amplification, and back to the speaker unit for audio output. The selection of the receiver that dominates the diversity action shifts automatically from receiver to receiver as the output signal varies in strength. For simplicity, the receiver monitor is shown in conjunction with receiver No. 3 only. The monitor may, however, be used to monitor any of the three receivers, at any time, without disturbing the operation of the diversity circuit. Keyer output also may be checked at the monitor.

b. Two Radio Receivers R-320A/FRC may be used with a dual-diversity converter and a teletypewriter for the dual-diversity reception of an F-S teletypewriter signal. The signal received by each antenna consists of a constant level c-w transmission at a frequency that differs by about 200 to 850 cps (cycles per second), depending on

whether a *mark* or a *space* is being transmitted. Each receiver converts this signal to an i-f (intermediate-frequency) which is fed to the dual-diversity converter. The dual-diversity converter provides neutral d-c (direct-current) output—that is, dc on *mark* and none on *space* to the teletypewriter. To intensify the space diversity feature, the avc (automatic-volume-control) bus of each receiver is interconnected, so that the more negative bias developed by the stronger signal acts to further decrease the weaker signal and resultant noise. The IF GAIN control of one receiver is initially set so that the IF OUTPUT from each receiver is the same. This adjustment becomes a monitoring function during reception and is accentuated by the system frequency stability. An external h-f oscillator or the variable-frequency oscillator from one receiver might be used to provide conversion oscillator output for both receivers, but no external provisions are made for the interconnection of the receivers.

Note.—With regard to Radio Receivers R–274A/FRR and R–483/FRR, make the avc interconnection between the receivers from the junction of resistor R60 (fig. 69) and capacitor C140 (fig. 70) of each; use a shielded cable lead whose sheath is grounded. Also use a common ground. Further, use the RF GAIN control so that the IF OUTPUT of each receiver is initially the same.

c. Alternate to the system described in *b* above, the audio output, instead of the i-f output, from each receiver may be fed to a suitable dual-diversity converter. The avc interconnection between receivers is maintained. In this instance, a common external bfo (beat-frequency oscillator) as well as the external h-f oscillator would provide for best results.

d. To provide for the space diversity reception of c-w and mcw transmissions, a system similar to that outlined in *c* above, wherein the dual-diversity converter is replaced by a diversity demodulator (detector), provides for suitable output to operate an ink recorder. In use, avc without bfo provides for mcw reception, and bfo without avc provides for c-w reception.

e. To provide for the space diversity reception of voice signals, common avc is used between receivers, but the audio output of only one receiver is used. To remove the audio from one receiver, disconnect the jumper on the terminal board designated DIODE OUTPUT on the rear apron of this receiver, and connect the negative terminal to one of the DIODE OUTPUT jumper terminals of the other receiver.

Note.—With regard to cw Radio Receivers R–274A/FRR and R–483/FRR, resistor R64 (fig. 70) is unsoldered from its junction with resistor R63 (fig. 67) and capacitor C142 (fig. 70). This simulates removing the DIODE OUTPUT jumper. The diode output negative terminal is then the junction of R63 and C142.

f. To provide for the space diversity reception of cw to a tone keyer or tape recorder, use the

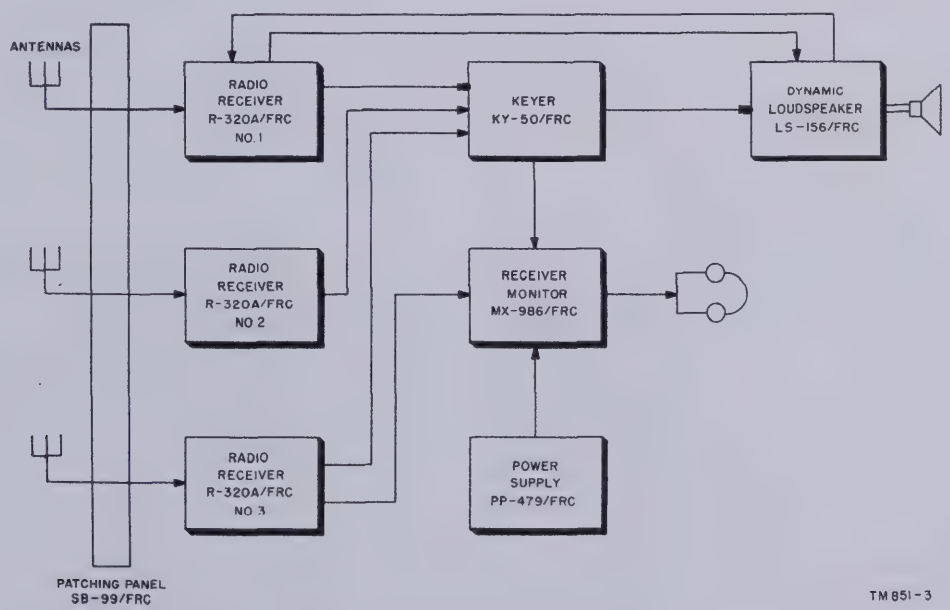

Figure 3. Radio Receiver R–320A/FRC, typical system application, simplified block diagram.

275375—52——2

method described in *e* above but remove the avc interconnection; do not use avc or bfo. To obtain the output, connect to one of the three interconnected jumper terminals of the DIODE OUTPUT.

5. Technical Characteristics

Frequency range:	
Band 1	.54 mc to 1.35 mc.
Band 2	1.35 mc to 3.45 mc.
Band 3	3.45 mc to 7.4 mc.
Band 4	7.4 mc to 14.8 mc.
Band 5	14.8 mc to 29.7 mc.
Band 6	29.7 mc to 54 mc.
Crystal controlled (Radio Receivers R–274A/FRR and R–274C/FRR only) (bands 2 through 5).	1.35 mc to 29.7 mc.
Receiver type	Superheterodyne, single and double conversion.
I-f (bands 1, 2, and 3) (single conversion).	455 kc.
I-f (bands 4, 5, and 6) (double conversion).	3,955 kc; then 455 kc.
Types of signals that can be received.	A-m. A1—cw. A2—cw. A3—Voice. F1-FSK Keying.
Number of tubes:	
Radio Receivers R–320A/FRC, R–483/FRR, and R–483A/FRR.	19 each.
Radio Receivers R–274A/FRR and R–274C/FRR.	20 each.
A-c supply requirements:	
Source rating	90- to 270-volt ac.
Radio Receivers R–483/FRR and R–483A/FRR.	25 to 60 cps.
Radio Receivers R–274A/FRR, R–274C/FRR, and R–320A/FRC.	50 to 60 cps.
Power consumption	130 watts.
Sensitivity	Mcw, 2 μv or better; cw, .75 μv or better; a signal-plus-noise to noise power ratio of 10 to 1 at a 3-kc bandwidth.
Selectivity:	
Crystal, 6 db down	2-kc, .5-kc, and 1.3-kc bandwidths.
Noncrystal, 6 db down	3-kc, 8-kc, and 13-kc bandwidths.
Fuses:	
Line fuse	1.6-ampere or 3-ampere.
B+ fuse	⅜-ampere.
Crystals:	
3,500 kc (all models)	3.5-mc crystal oscillator (double conversion).
455 kc (all models)	I-f filter circuit.
1.805 mc to 11.218333 mc (Radio Receivers R–274A/FRR and R–274C/FRR only).	H-f crystal oscillator (bands 2 through 5) (Crystal Unit CR–18/U not supplied).
Permissible ambient temperature.	32° F. to 140° F.
Relative humidity	95 percent.
Output matching load impedances:	
600 OHMS balanced	600 ohms, resistive.
PHONES	8,000 ohms, resistive. (This circuit will operate satisfactorily with headsets ranging from 600- to 8,000-ohm impedance.)
I-F OUTPUT	70 ohms, resistive.
Maximum undistorted power output.	2 watts.
Antennas:	
Dipole	Consists of Wire W–152, two Insulators IN–124, Rope RP–3, and six Insulators IN–125.
Straight wire (simple)	Consists of Wire W–152.
Lead-in	Wire W–151.
Weight:	
Radio Receiver R–274A/FRR.	
Table-cabinet type	87.5 pounds.
Rack-mounting type	66 pounds.
Radio Receiver R–320A/FRC.	67.5 pounds.
Radio Receiver R–483/FRR or R–483A/FRR.	96 pounds.
Radio Receiver R–274C/FRR.	97.5 pounds.

6. Packaging Data

a. When encased for shipment, Radio Set SCR–244–D and Radio Receivers R–320A/FRC, R–274A/FRR, and R–274C/FRR each includes running spares (par. 15) contained in an inner wooden box. In Radio Set SCR–244–D, the inner wooden box also contains the minor components listed in paragraph 14. Moisture-vaporproof containers are used to inclose each of the receiver components and the cartoned items in the inner wooden box. An exploded view of the typical export packing used is shown in figure 12 for Radio Set SCR–244–D. The dimensions, volume, and weight of each case used for each equipment are included in the following chart.

Equipment	Number of cases	Height (in.)	Width (in.)	Depth (in.)	Volume (cu ft)	Unit weight (lb)
Radio Set SCR–244–D	1	18¼	35	25¼	9. 33	175
Radio Receiver R–320A/FRC	1	18	34	23	8. 15	155–170
Radio Receiver R–274A/FRR or R–274C/FRR rack mounting	1	18	34	23	8. 15	155–220
Radio Receiver R–274A/FRR table cabinet	1	18¼	35	25¼	9. 33	170–240

Note.—Items may be packaged in a manner different from that shown, depending on the supply channel. Where a weight range is shown, the difference is due to the extra excelsior and larger cases used to pack some of the receivers.

b. The following list indicates the contents of each case. See the packaging list attached to each case for exact contents.

Case dimensions (in.)	Contents	Notes
18¼ x 35 x 25¼	1—Radio Receiver R–483/FRR or R–483A/FRRG.	Comprises cabinet receiver with tubes, and indicator lamps, all packed in a separate cartoned assembly.
	1—Set of running spares consisting of 12 electron tubes, 2 dial lamps, and 12 fuses.	Operating components and running spares are all cartoned and packed in a separate wooden box.
	1—Headset Cord, Navy Type No. 3W–49534.	
	2—Insulators IN–124	
	6—Insulators IN–125	
	1—150-ft length of Wire W–151 (on reel)	
	1—150-ft length of Wire W–152	
	1—Headset, Navy Type No. 49507	
	2—Technical Manuals TM 11–851	
18 x 34 x 23	1—Radio Receiver R–320A/FRC, R–274A/FRC, or R–274C/FRR.	(Radio Receiver R–274A/FRR only.) Table cabinet or rack mountings for all types. Tubes and indicator lamps are included, and are all packed in a separate cartoned assembly.
	1—Set of running spares consisting of 2 dial lamps, 12 fuses, and 13 electron tubes in Radio Receivers R–274A/FRR and R–274C/FRR but only 12 electron tubes in Radio Receiver R–320A/FRC.	Running spares are all cartoned and packed in a separate wooden box.
	2—Technical manuals TM 11–851	

7. Table of Components for Radio Set SCR–244–D

a. The various components comprising Radio Set SCR–244–D are tabulated below and are illustrated in figure 2.

Component	Required No.	Height (in.)	Depth (in.)	Length (in.)	Volume (cu ft)	Unit weight (lb)
Wire W–152	150 ft			1, 800	. 026	3. 36
Insulator IN 124	2	½	⅜	6	. 002	. 2
Insulator IN–125	6	¾	¾	4	. 006	1. 2
Rope RP–3	150 ft			1, 800	. 076	. 69
Wire W–151 (on reel)	150 ft			1, 800	. 067	4. 2
Radio Receiver R–483/FRR or R–483A/FRR	1	12¾	17½	21⅜	2. 8	102. 5
Headset, Navy type No. 49507	1				. 04	. 63
Headset, Cord Navy type No. 3W–49534	1			66	. 006	. 28
Technical Manual TM 11–851	2	11	1	8½	. 108	2
Total					3. 131	115. 06

Note.—This list for general information only. See appropriate supply publications for information pertaining to requisition of spare parts.

b. The running spares issued with each equipment are identified in paragraph 15.

8. General Description

a. Each receiver component comprises a chassis to which is mounted the light gray front panel of the receiver. The receiver is either the table-cabinet or rack-mounting type. The receiver cabinet is dark gray and has a top hinged cover with a catch-latch bolt. It is cut away at the rear to provide access to the rear apron of the chassis. For standard 19-inch rack mounting, the receiver chassis and panel assembly is fitted with a bottom plate and a rubber-channeled cover. The chassis and panel assembly differences between the table-cabinet and the rack-mounting version of the receiver are mechanical in that the two rear corner nut plate brackets used for the table-cabinet receiver are replaced in the rack-mounting type by two slightly shorter brackets; also, another much shorter angle bracket is added to the screw, nut, and lockwasher holding 10-μf (microfarad) capacitor C151 (fig. 67).

b. The front panel contains a headphone jack, a dual scale meter, and the controls and switches used to operate the receiver. The rear apron contains adjustment controls and various means for interconnection with auxiliary equipment.

c. The receiver provides for coverage of the .54- to 54-mc frequency range through the use of six bands, each of which utilizes four r-f (radio-frequency) tuner subassemblies housed in a rotary turret. The rotary turret is indented to any one of the six frequency bands by the BAND CHANGE switch. This also provides a band dial indication in the MEGACYCLES window of the band chosen and positions a movable pointer to the proper frequency scale of the main tuning dial. The main tuning and vernier dials are visible through the left- and right-hand windows, respectively, when facing the receiver. The flywheel balanced TUNING control friction drives the vernier dial geared to the main dial by a precise antibacklash, gear-train mechanism. The tuning ratio of the TUNING control to the main dial is 50 to 1 and of the vernier dial to the main dial, 6 to 1. The main dial, apart from its six frequency band scales, has an outer scale which, in conjunction with the vernier dial, provides vernier readings for the accurate logging and resetting of any frequency tuned in. The TUNING lock provides positive locking action on the vernier dial even though the TUNING control remains free to turn. To log a station tuned in, the verneir dial pointer reading in tens, units, and decimals of a unit is added to the main dial outer scale pointer reading in hundreds; that is, if the readings are 87.6 and 4, respectively, the reading to log is 487.6. The rotation over a frequency band is approximately 600 vernier divisions, with one-half division calibration points. Since one-tenth divisions can be estimated, each frequency band is divided into approximately 6,000 readable indications, resulting in extreme accuracy in logging.

d. Radio Receiver R–274A/FRR or R–274C/FRR each has a frequency control unit that provides for fixed-frequency, crystal-controlled reception when the front panel XTALS-VFO switch associated with the unit is switched from its VFO position to one of the six XTALS positions. The unit has six crystal holders, each of which may be fitted with a Crystal Unit CR–18/U crystal (par. 16*b*). The six crystal holders are numbered from 1 through 6, corresponding to the 1 through 6 front panel markings associated with the XTALS switch. The small plastic chart alongside this switch on the front panel is used to pencil in or ink record the signal frequency of each crystal used; the chart numerals identify the crystal holder used. The front panel Δ FREQ control, also associated with the unit, is used to compensate for the frequency tolerance of each crystal supplied, when it is selected for use.

9. Description of Radio Receiver R–483/FRR

Radio Receiver R–483/FRR (figs. 4 and 5) is of the table-cabinet type (par. 8*a*). The receiver self-contained power supply is designed to operate from a 25- to 60-cps, 90- to 270-volt a-c power source. The description provided in paragraph 8*b* and *c* is applicable to the receiver.

10. Description of Radio Receiver R–274A/FRR

Radio Receiver R–274A/FRR (figs. 6 and 7), serial Nos. 1 through 80, is the table-cabinet type (par. 8*a*); the other receivers are the rack-mounting type (par. 8*a*). The receiver self-contained power supply is designed to operate from a 50- to 60-cps, 90- to 270-volt a-c power source. The description provided in paragraph 8 is fully applicable to the receiver.

TM 851–4

Figure 4. Radio Receiver R–483/FRR, front view.

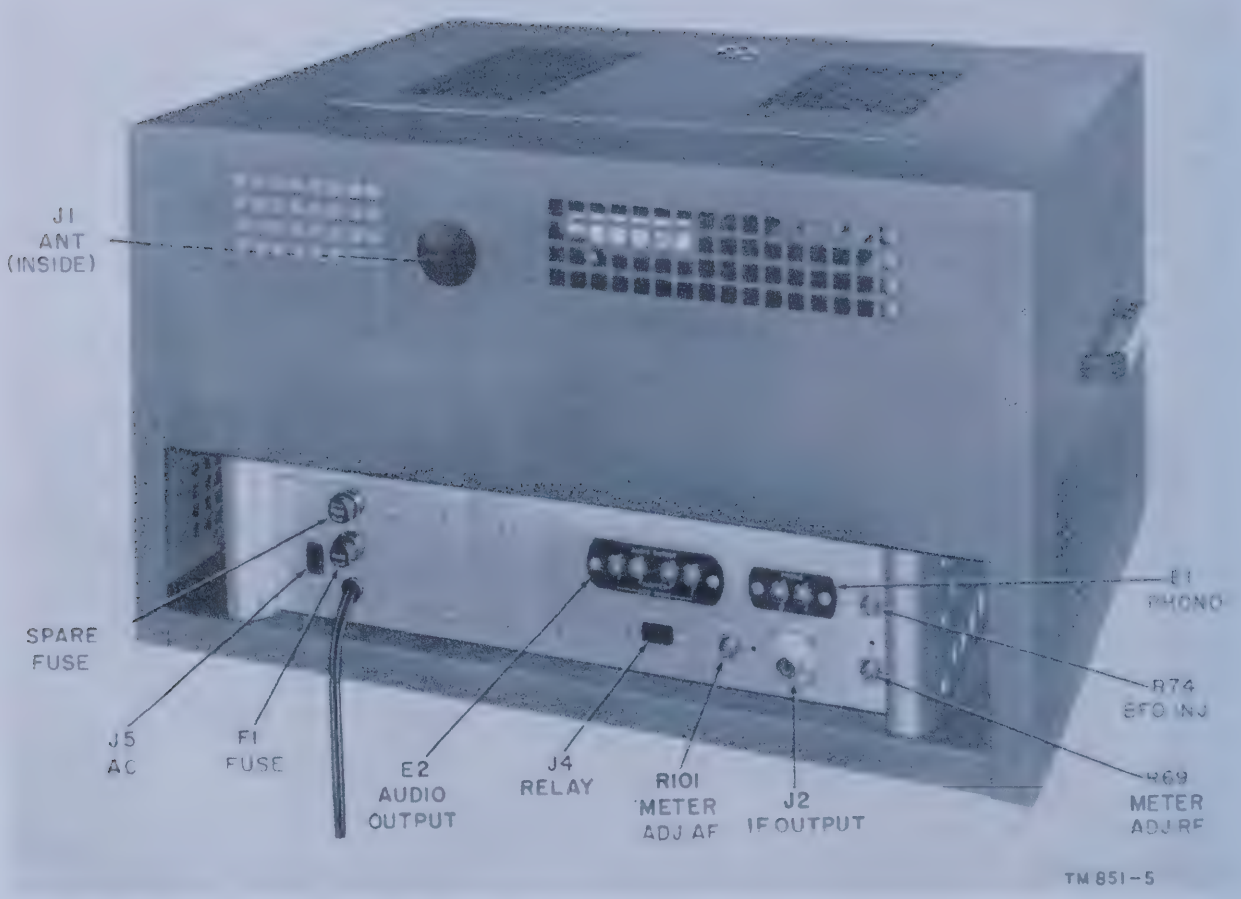

Figure 5. Radio Receiver R–483/FRR, rear view.

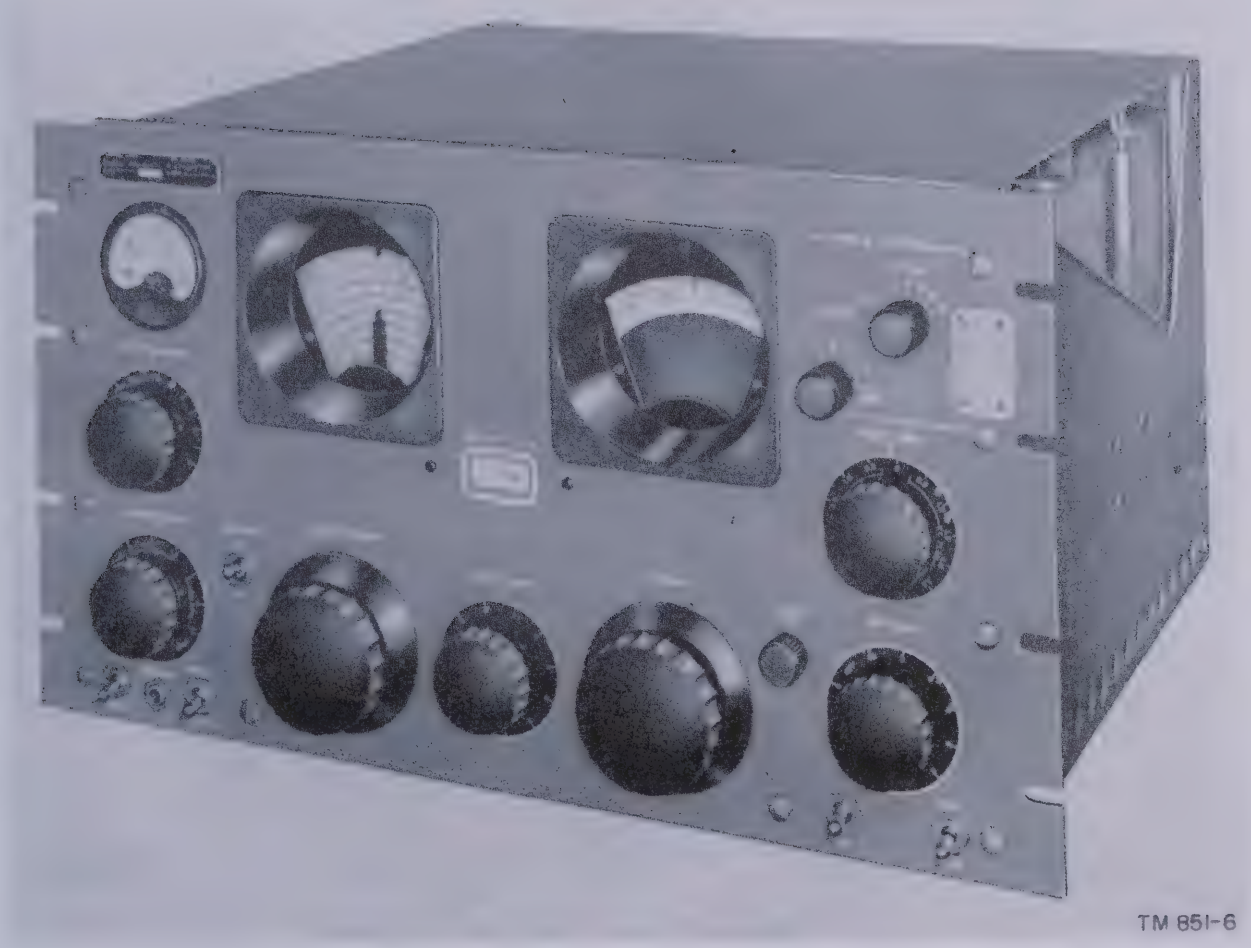

Figure 6. Radio Receiver R–274A/FRR, front view of rack-mounting model.

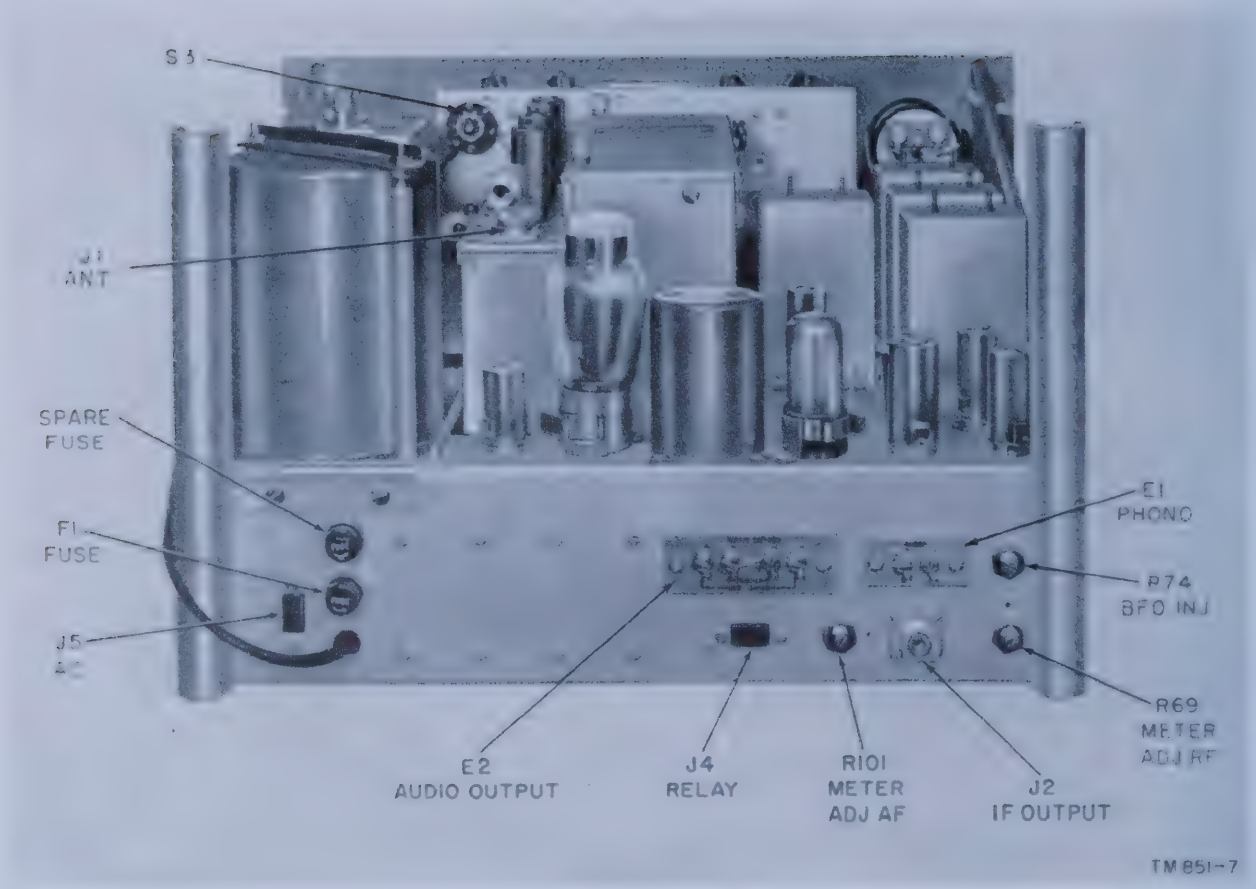

Figure 7. Radio Receiver R–274A/FRR, chassis and panel assembly, rear view.

Figure 8. Radio Receiver R–320A/FRC, front view.

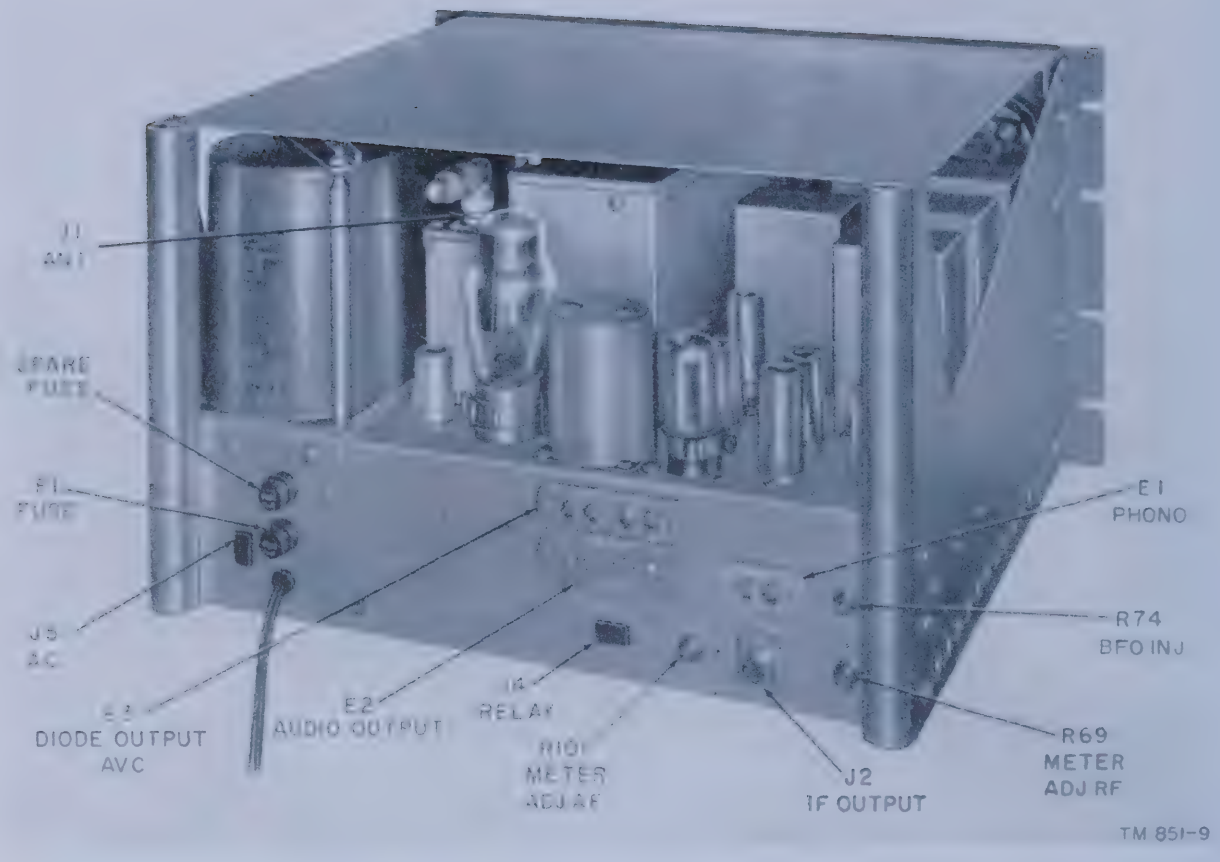

Figure 9. Radio Receiver R–320A/FRC, rear view.

11. Description of Radio Receiver R–320A/FRC

a. Radio Receiver R–320A/FRC (figs. 8 and 9) is the rack-mounting type (par. 8*a*). The receiver self-contained power supply is designed to operate from a 50- to 60-cps, 90- to 270-volt a-c power source. The outline provided (par. 8*b* and *c*) is applicable to the receiver.

b. The receiver has an IF GAIN control on its front panel and DIODE OUTPUT and AVC terminals on its rear apron. Otherwise, apart from its power transformer frequency rating, its chassis and panel assembly is similar to that of Radio Receiver R–483/FRR (par. 9).

12. Description of Radio Receiver R–274C/FRR

a. Radio Receiver R–274C/FRR is the rack-mounting type (par. 8*a*). The receiver self-contained power supply is designed to operate from a 50- to 60-cps, 90- to 270-volt a-c power source. The description provided (par. 8) is fully applicable to the receiver.

b. Figure 6, showing the front view of Radio Receiver R–274A/FRR, is equally applicable to Radio Receiver R–274C/FRR. Figures 7 and 10 show the visible differences between the two receivers. Note that Radio Receiver R–274C/FRR utilizes the top-hat type of tube clamps; a small shield covers switch S3; it has a DIODE OUTPUT-AVC terminal board E3 as does Radio Receiver R–320A/FRC (fig. 9); also both fuses, F1 and F2, are contained on the rear apron, and a spare fuse for each is located under the cover designated SPARE FUSES. There are, however, no RELAY and PHONO terminal provisions in Receiver R–274C/FRR.

c. Radio Receiver R–274C/FRR, serial Nos. 1 through 48, has no shield cover for switch S3. Also, FUSE F1 is rated at 3 amperes as designated on the small plate at F1 on the rear apron.

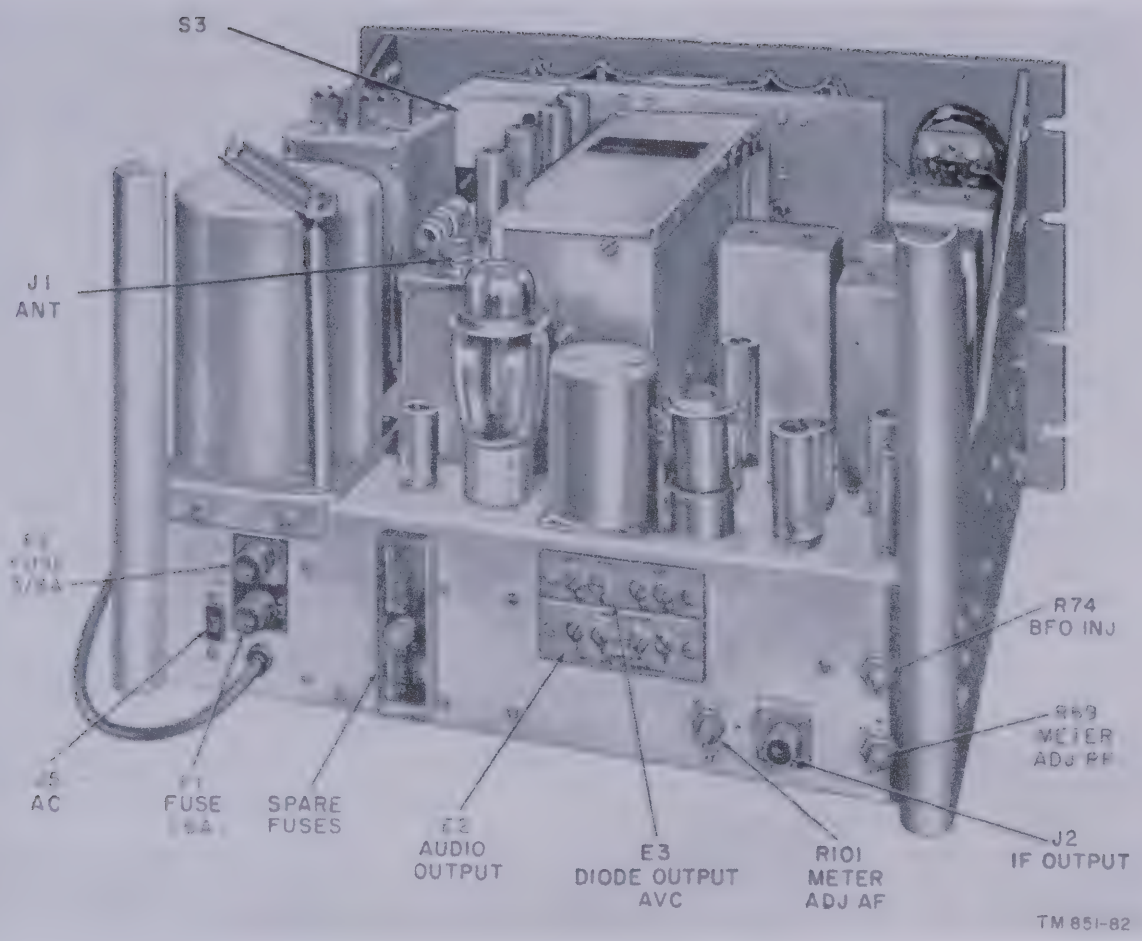

Figure 10. Radio Receiver R–274C/FRR, chassis and panel assembly, rear view.

13. Description of Radio Receiver R–483A/FRR

a. Radio Receiver R–483A/FRR is the table-cabinet type (par. 8*a*). The receiver self-contained power supply is designed to operate from a 25- to 60-cps, 90- to 270-volt a-c power source. The outline provided in paragraph 8*b* and *c* is applicable to the receiver.

b. Figure 4, showing the front view of Radio Receiver R–483/FRR, is equally applicable to Radio Receiver R–483A/FRR. Radio Receiver R–483A/FRR utilizes the top-hat type of tube clamps (fig. 10) and its rear apron is identical with that outlined for Radio Receiver R–274C/FRR (par. 12*b* and *c*).

14. Description of Minor Components of Radio Set SCR–244–D

(fig. 2).

The minor components of Radio Set SCR–244–D can be used with Radio Receivers R–320A/FRC, R–274A/FRR, and R–274C/FRR. Headset Cord, Navy type No. 3W–49534, provides for connecting the headset, Navy type No. 49507, to the equipment. Wire W–151 is the antenna lead-in wire. Rope RP–3 is used to support the doublet antenna (par. 23) comprising Wire W–152 and Insulators IN–124 and IN–125.

15. Running Spares

A group of running spares is supplied with each radio equipment. Spares are provided for all normally expendable items such as tubes, pilot lamps, and fuses.

a. Following is a list of running spares for Radio Set SCR–244–D:

3 tubes 6BA6.
2 tubes 6C4.
1 tube 6BE6.
2 tubes 6AL5.
1 tube 12AU7.
1 tube 6V6GT.
1 tube 5R4GY.

1 tube OA2.
6 fuses, 3-ampere, type AGC–3 (Buss).
6 fuses, ⅜-ampere, type AGC–⅜ (Buss) (for Radio Receiver R–483A/FRR only).
6 fuses, ⅜-ampere, type GJV–⅜ (Buss) (for Radio Receiver R–483/FRR only).
2 lamps, dial, type 47 (Graybar).

b. Following is a list of running spares for Radio Receivers R–274A/FRR, R–274C/FRR or R–320A/FRC:

3 tubes 6BA6.
2 tubes 6C4.
1 tube 6AC7 (for Radio Receiver R–274A/FRR or R–274C/FRR only).
1 tube 6BE6.
2 tubes 6AL5.
1 tube 12AU7.
1 tube 6V6GT.
1 tube 5R4GY.
1 tube OA2.
6 fuses, 1.6-ampere, type MDL 1. 6-ampere 125 V FUSETRON (Buss) (for Radio Receiver R–274C/FRR, after serial No. 487 only).
6 fuses, 3-ampere, type AGC–3 (Buss) (for all of these radio receivers except the R–274C/FRR, serial Nos. 487 and above).
6 fuses, ⅜-ampere, type AGC–⅜ (Buss) (for Radio Receiver R–274C/FRR only).
6 fuses, ⅜-ampere, type GJV–⅜ (Buss) (for Radio Receivers R–274A/FRR and R–320A/FRC only).
2 lamps, dial, type 47 (Graybar).

16. Additional Equipment Required

The following items are *not* supplied as part of the equipment but are required for its installation and operation.

a. Equipment Required for Radio Set SCR–244–D.

(1) Power source, 250 watts minimum, 25 to 60 cps, at any voltage within the range of 90 to 270 volts, to provide input power to Radio Receiver R–483/FRR or R–483A/FRR of the equipment.
(2) Two natural or supplied pole structures for mounting between the fabricated doublet antenna (par. 23).
(3) An external ground for grounding the chassis of the receiver.

b. Equipment Required for Radio Receivers R–274A/FRR, R–274C/FRR, and R–320A/FRC.

(1) Power source as described in subparagraph *a* above, but for 50 to 60 cps.
(2) An external ground (*a* above).
(3) Doublet antenna system (par. 23), or equivalent.
(4) Crystal Unit CR–18/U crystals (for Radio Receiver R–274A/FRR or R–274C/FRR only).

17. Differences in Radio Receivers R–483/FRR, R–274A/FRR, and R–320A/FRC

a. The external appearance of Radio Receivers R–483/FRR, R–274A/FRR, and R–320A/FRC is described in paragraphs 9, 10, and 11 respectively. Some of the receiver units incorporate design changes to improve operational features. They are listed in the table below as applicable to each receiver designation. No distinguishing model designation is applicable to Radio Receiver R–274A/FRR incorporating the design changes.

Item	Radio Receiver R–274A/FRR, serial Nos. 1 through 909, and Radio Receiver R–320A/FRC	Radio Receiver R–274A/FRR, serial Nos. 910 and above, and Radio Receiver R–483/FRR
Fuse F2	F2 is rated at ¼ ampere	F2 is rated at ⅜ ampere.
	Radio Receiver R–274A/FRR, serial Nos. 1 through 190.	Radio Receiver R–274A/FRR serial Nos. 191 and above, and Radio Receiver R–320A/FRC and R–483/FRR.
IF OUTPUT cathode follower circuit.	.002-μf capacitor C147 is connected from the pin 8 cathode of V16B directly to J2.	5,100-μμf capacitor C147 is connected to r-f coil L53, whose tap connects to J2.
	Radio Receiver R–274A/FRR serial Nos. 1 through 1867; and Radio Receivers R320A/FRC and R–483/FRR.	Radio Receiver R–274A/FRR, serial Nos. 1868 and above.
Resistor R79	R79 is 1K	R79 is 680 ohms; but for serial Nos. 1523, 1626, 1627, 1628, 1629, 1630, 1632, 1633, 1634, 1635, 1636, 1637, 1638, and 1639, R79 consists of two 1K resistors, in parallel.

b. The various models of Radio Receiver R–274A/FRR, incorporating these design changes, are interchangeable. As can be seen from the table, the units of Radio Receivers R–320A/FRC and R–483/FRR are of one or the other design with regard to the differences in design listed.

c. The ¼-ampere fuse (F2) in earlier models should be replaced by a ⅜-ampere fuse at the earliest opportunity. Department of the Army MWO SIG 76 gives detailed instructions on the requirements of this change.

18. Differences between Radio Receivers R–274A/FRR and R–274C/FRR

a. The external appearance of Radio Receivers R–274A/FRR and R–274C/FRR is described in paragraphs 10 and 12 respectively. Radio Receiver R–274C/FRR, however, incorporates design changes to improve operational features. The design differences between the later units of Radio Receiver R–274A/FRR and the units of Radio Receiver R–274C/FRR, serial Nos. 1 through 486, are listed in the table below.

Item	Radio Receiver R–274A/FRR	Radio Receiver R–274C/FRR, serial Nos. 1 through 486
Fuse F2	F2 (fig. 67) is the pigtail type and is located at T8 (fig. 70) in the receiver chassis.	F2 is the cartridge type and is contained in a holder on the rear apron (fig. 10).
Spare fuse complement	A spare F1 fuse, contained in SPARE FUSE holder (fig. 7), is provided.	Spare fuses F1 and F2, under SPARE FUSES cover (fig. 10), are provided.
RELAY J4 connector	J4 (fig. 7) is included	J4 is not provided.
Tubes V3, V17, and V19 retainers.	Utilizes tube clamps of the snap-spring type (fig. 7).	Utilizes retainers of the top-hat type (fig. 10).
Terminal board E3	E3 is not provided	E3 (fig. 10) is the DIODE OUTPUT-AVC terminal board.
Coupling capacitor C45	C45 (fig. 86) is used to couple signal to pin 7 grid of V5, the first mixer.	C45 is not used; a direct connection is provided.
455-kc i-f gate stage V7	V7 cathode pin 7 grounded and −10-volt d-c bias fed to stage through resistor R32 (fig. 67) and the decoupling circuit of resistor R34 and capacitor C100 (fig. 69) combination.	R34 and C100 are omitted and the low-voltage end of R32 is grounded; also cathode resistor R112 (fig. 68) provides self-bias for V7.
Resistor R102 and potentiometer R69.	R102 (fig. 69) used in series with METER ADJ RF control R69 in the plate circuit of the V14A detector to provide for some indication on meter M1 when R69 is set to its shorted position. R69 is 1K.	R102 is omitted; R69 is 3,300 ohms.
Bypass capacitor C163	C163 is not used	C163 (fig. 68) is included to provide for further isolating signal from B+ supply voltage line to V1 and V2.
Bypass capacitor C162	C162 is not used	C162 (fig. 68) is included to provide for isolating signal at cathode of V14B avc rectifier from +150-volt d-c supply.
Resistor R65	R65 (fig. 67) in the plate circuit of detector V14A is 47K.	R65 changed to 22K to decrease a-f input to V16B first a-f amplifier.
Resistor R113	R113 is not used	R113 (fig. 68) is included in the grid circuit of V11 to provide desired grid bias to stage; it acts as a voltage divider with R56 and R57 across the −10-volt d-c supply.
Avc time constant resistor-capacitor combinations.	Resistor R60 (fig. 69) and capacitor C140 (fig. 70) in the plate circuit of V14B provide avc time constant. R60 is 1 meg and C140 is 1,000 μμf.	R60 is 1 meg, C140 is 430 μμf; also R111 (fig. 68) and C164 (fig. 68) are added as a separate avc filter section. R60, C140, R111, and C164 together provide for more effective avc filter action. R111 is 100K and C164 is 430 μμf.
Coupling capacitor C145	C145 (fig. 70) is a 7-μμf coupling capacitor to provide signal input from the plate of the V11 to the grid of the V16A cathode follower.	C145 is a 15-μμf coupling capacitor to provide signal input from the grid circuit of i-f driver V11 to the grid of cathode follower V16A.

Item	Radio Receiver R–274A/FRR	Radio Receiver R–274C/FRR, serial Nos. 1 through 486
Coupling capacitor C138	C138 (fig. 69) is a 7-$\mu\mu$f coupling capacitor to provide signal input from the plate of V11 to the plate of V14B.	C138 is 51 $\mu\mu$f.
Coupling capacitor C139	C139 (fig. 70) is a 15-$\mu\mu$f coupling capacitor to provide signal input from the plate of V11 to the plate of V14A.	C139 is 51 $\mu\mu$f.
Resistors R103 through R110.	R103 through R110 are each 510 ohms	R103 through R110 are each 27K.
Capacitors C37, C57, and C91, band 5.	C37 and C57 are each 85 $\mu\mu$f and C91 is 92 $\mu\mu$f.	C37, C57, and C91 are each 100 $\mu\mu$f.
Capacitor C95, band 6	C95 is 42 $\mu\mu$f	C95 is 51 $\mu\mu$f.
Terminal boards E4 and E6	E4 and E6 are not required	E4 and E6 (fig. 68) are provided to terminate R64 and C145, respectively.

b. Radio Receivers R–274A/FRR and R–274C/FRR are interchangeable. Since Radio Receiver R–274C/FRR has the DIODE OUTPUT-AVC terminal board E3, however, it is better suited for space diversity use.

19. Differences in Radio Receiver R–274C/FRR

a. The external appearance of Radio Receiver R–274C/FRR is described in paragraph 12. Some of the later units, however, incorporate design changes to improve operation features. No distinguishing model designation is applicable to the units incorporating the design changes.

Item	Radio Receiver R–274C/FRR	Radio Receiver R–274C/FRR
	SERIAL NOS. 1 THROUGH 486	SERIAL NOS. 487 THROUGH NO. 1569
FUSE F1 (fig. 10) in T8, power transformer primary.	F1 is rated at 3 amperes	F1 is rated at 1.6 amperes and is of the slow-blow type.
Bypass capacitor C169	C169 is not used	C169 is included at E3, between AVC—(minus) and ground (fig. 68). C169 is .01 μf.
T8 primary, line filter capacitors.	The line filter capacitors are C152A and C152B, each a .05-μf paper capacitor.	The line filter capacitors are C152 and C168, each a .01-μf mica capacitor.
Resistors R72 and R73	R72 (fig. 67) and R73 (fig. 69) act as bleeders for the B+ rectifier. R72 is 20K, ½ watt, and R73 is 56K, 1 watt.	The junction of R72 and R73 (fig. 68) provides screen grid supply voltage to V1 and V2. R72 is 7,500 ohms and R73 is 10K, each rated at 20 watts.
Bypass capacitor C167	C167 is not used	C167 (fig. 68) is included at E13 to provide for isolating signal from the +150-v d-c supply line of V3, V4, and V5. C167 is .022 μf.
Resistors R3 and R14	R3 and R14 (fig. 86), the screen grid, voltage dropping resistors for V1 and V2, are 33K.	R3 and R14 are each 3,300 ohms.
Bypass capacitor C165	C165 is not used, but C23 (fig. 86) and C163 (fig. 68) bypass the screen grid and plate supply for V1 and V2.	C165 (fig. 68) and C163 (fig. 68) bypass the plate supply for V1 and V2, while C23 (fig. 86) only bypasses the screen grid supply for V1 and V2.
C166 and R114, decoupling circuit.	C166 and R114 are not used	C166 and R114 (fig. 86) comprise a decoupling circuit in screen grid supply to V2. C166 is .01 μf and R114 is 1K.
Switch S3 and shield	S3 is a two-contact switch and has no shield cover.	S3 has a grounding contact for capacitor C60 (fig. 101) when S3 is in its open position; also, it has a shield cover (fig. 10).

Item	Radio Receiver R–274C/FRR	Radio Receiver R–274C/FRR
	SERIAL NOS. 487 THROUGH 1569	SERIAL NOS. 1570 AND ABOVE
Screen grid supply for V9 and V10.	Derived from B+ rectifier +228- to +265-volt supply, through screen dropping resistor R48 (fig. 67) for V9 and R53 (fig. 67) for V10.	Derived from B+ rectifier +90- to +150-volt supply, from junction of resistor R72 and R73 (fig. 68); R48 and R53 are not used.
Screen grid voltage supply for V1 and V2.	The junction of R72 and R73 (fig. 68) provides screen grid supply voltage for V1 and V2. R3 and R14 (fig. 86), the screen grid voltage dropping resistors, are each 3,300 ohms. Capacitor C23 (fig. 86) bypasses the rf across screen voltage supply to V1 and V2; also C165 and C163 (fig. 68) bypass rf across the plate supply for V1 and V2.	Derived from B+ rectifier +228- to +265-volt supply through S9, and resistors R4 (fig. 86) and R3 for V1, and through resistors R6, R114, and R14 for V2. R3 and R14 are each 33K. C23 (fig. 86) and C163 (fig. 68) bypass rf across the screen grid and plate voltage supply for V1 and V2; C165 is not used.
Avc bus, bias voltage	The avc bus, bias voltage developed is fully effective in grid circuits of V1, V2, V9, and V10. It is derived from one arm of the AVC-MAN switch S8 (fig. 69). Input resistor R32 for V7 is grounded to chassis. The grid (pin 7) return for V6 connects to the −1-volt bias supply, the junction of resistors R93 (fig. 67) and R94 (fig. 79).	The avc bus, bias voltage developed is fully effective in grid circuits of V6, V7, V9, and V10. It is applied partially to the grid circuit of V1 and V2. For V7, input resistor R32 (fig. 67) is isolated from ground by low-impedance capacitor C165 (fig. 68); also resistor R53 (fig. 68) from the junction of C165 and R32 connects to the avc bus, as does the control grid return for V6 from here. To provide part of the avc bias for V1 and V2, resistors R48, R115, and R116 in series act as a voltage divider from the avc bus at S8 to the −1-volt negative bias at the junction of resistors R94 and R93 (fig. 68). The grid return from V1 and V2 normally is connected to the screw terminal at the junction of R48 and R115; for direction finder use, it is connected to the junction of R115 and R116.

b. The various models of Radio Receiver R–274C/FRR are interchangeable. However, Radio Receiver R–274C/FRR, serial Nos. 1570 and above, is more suitable for direction finder use and provides better signal-to-noise ratios for normal use. A 3-ampere fuse F1 should be replaced by a 1.6-ampere slow-blow fuse at the earliest opportunity.

20. Differences between Radio Receivers R–483/FRR and R–483A/FRR

a. The external appearance of Radio Receivers R–483/FRR and R–483A/FRR is described in paragraphs 9 and 13 respectively; Radio Receiver R–483A/FRR, however, incorporates design changes to improve operational features.

b. Radio Receiver R–483/FRR is similar, with regard to design changes, to the later units of Radio Receiver R–274A/FRR outlined in the table in paragraph 17*a*, but R79 is 1K instead of 680 ohms. Radio Receiver R–483A/FRR is similar with regard to design changes to Radio Receiver R–274C/FRR, serial Nos. 1 through 486. Thus, the design differences between Radio Receivers R–483/FRR and R–483A/FRR are as outlined in the table in paragraph 18*a*, and R79 is 680 ohms in Radio Receiver R–483A/FRR. Radio Receivers R–483/FRR and R–483A/FRR are interchangeable. However, Radio Receiver R–483A/FRR is better suited to space diversity system use because of the DIODE OUTPUT and AVC terminals that it incorporates.

CHAPTER 2
OPERATING INSTRUCTIONS

Section I. SERVICE UPON RECEIPT OF RADIO SET SCR–244–D

21. Siting

(fig. 11)

a. External Requirements. The 150-foot antenna lead-in Wire W–151 provides for considerable leeway with regard to the relative location of the doublet antenna (par. 23) and Radio Receiver R–483/FRR or R–483A/FRR when siting the equipment. The best location for the doublet antenna is as high as possible so that it clears hills, cliffs, densely wooded areas, buildings, bridges, and other obstructions. The best possible location for Radio Receiver R–483/FRR or R–483A/FRR and any associated equipment is where the shelter in which it is housed cannot be seen, depending on the tactical situation. Also, the shelter should provide for convenient access by messengers and vehicle, whether the installation is on a vehicle, or a vehicle is used merely for transportation. When choosing the site for the antenna, remember that depressions, valleys, and other low places are poor locations for radio reception and transmission because the surrounding high terrain absorbs (r-f) energy. Weak or otherwise undesirable signals may be expected if the set is operated under, or close to, steel bridges, underpasses, powerlines, or power units. Choose, if possible, a location on a hilltop or an elevation. Flat ground is desirable. Normally, transmission over water is better than over land. See that drainage is adequate to prevent flooding the interior of the shelter. If the equipment is part of a communication center but is not installed within the center, locate it nearby. In locating the doublet antenna, the plane of the doublet should be as near as possible normal to the direction of the desired signal. When a straight wire antenna of the Beverage type is used, point it so that its direction is toward the desired signal. Avoid obstructions 2° to 3° above the horizontal plane of the antenna from the desired signal direction. This is approximately a height of 200 to 300 feet at a distance of 1 mile from the antenna.

b. Interior Requirements. The shelter for the equipment must meet the following *minimum* requirements:

(1) It must be large enough to house Radio Receiver R–483/FRR or R–483A/FRR and the associated equipment used, so that the receiver, located on a table, may be operated properly from a seated position. Additional room should be provided for at least one messenger, since any movement external to the shelter may attract attention to it.

(2) Adequate sheltered light for day and night operation, depending on the tactical situation, may be provided in the form of a droplight and extension cord which may be plugged into the a-c outlet contained in Radio Receiver R–483/FRR or R–483A/FRR. The pilot lamps of Radio Receivers R–483/FRR and R–483A/FRR provide sufficient illumination to operate the receivers, if the operator is thoroughly familiar with the location of all the operating controls.

22. Uncrating, Unpacking, and Checking New Equipment

Note.—For used or reconditioned equipment, refer to paragraph 26.

a. General. Equipment is shipped in oversea packing cases in almost every instance. When Radio Set SCR–244–D is shipped locally, the inner wooden box, used for the operating components and running spares, is omitted. When new equipment is received, select a location convenient to the permanent or semipermanent installation

SITING

GOOD:
HILLTOP, FLAT TERRAIN OR
NEAR LARGE WATER SURFACE

BAD:
NEAR HIGH TENSION WIRES,
STEEL BRIDGES, OR IN VALLEYS
OR DEPRESSIONS

TM 851-10

Figure 11. Siting Radio Set SGR-244-D.

where the equipment may be unpacked without exposure to the elements. The instructions given in *b* below apply to each of the equipments covered by this manual.

Caution: Be careful when uncrating, unpacking, and handling the equipment; it is easily damaged. If it becomes damaged or exposed, a complete overhaul might be required or the equipment might be rendered useless.

b. Step-by-Step Instructions for Uncrating and Unpacking Export Shipments (fig. 12).

(1) Place the packing case near the operating position.
(2) Cut and fold back the metal straps.
(3) Remove the nails with a nailpuller to remove the top of the packing case.
(4) Remove excelsior, if any, from around the cartoned receiver, the cartoned operating components, and the running spares.
(5) Remove the cartoned receiver and the wooden box containing the cartoned running spares and accessories.
(6) Remove waterproof tape from the waterproof overwrap around the cartoned receiver, and then remove the paper.
(7) Open the carton and remove the inner carton containing the receiver.
(8) Remove the heat-sealed, moisture-vaporproof bag from around the inner carton.
(9) Open the inner carton and remove the silica gel desiccant (nine bags, each individually wrapped in tissue paper).
(10) Remove the wooden frame from the inner carton (used with rack-mounting models); also remove the corrugated interiors comprising two side pieces, one front (if any), one back, and one top.
(11) Remove the receiver and place it as near as possible to its final location, possibly on the workbench.
(12) Remove the cartoned running spares and minor components (par. 14) if any, from the wooden box.
(13) Remove the waterproof wrapper from the carton.
(14) Open the carton and remove the individual setup box used to house each running spare.
(15) Remove the individual moistureproof bag from each running spare; also remove the silica gel packed with the headset and cords, if any.
(16) Inspect the equipment for possible damage incurred during shipment.

Note.—Save the original packing cases and containers. They can be used again when the equipment is repacked for storage or shipment. The silica gel cannot be re-used. It must be replaced when the equipment is repacked.

23. Installation of Antenna Components of Radio Set SCR–244–D

All operating components necessary to install a complete antenna are provided with each equipment (par. 7). Refer to figure 15 which shows the components interconnected to form a doublet antenna system.

a. Determine the signal frequency to be received

b. Determine the doublet antenna length for the signal frequency from the following relationship:

$$\text{Length (feet)} = \frac{468}{\text{Frequency (mc)}}.$$

(1) For signal frequency reception at either of two frequencies, provide the added doublet antenna length for the lower frequency, through use of Insulators IN–125 which then can be jumpered with Wire W–152 for operation at the lower frequency. Follow a similar procedure for the next lower signal frequency and so on.
(2) For the reception of signal frequencies for which the doublet antenna length calculated exceeds the 150-foot length of available Wire W–152, use all of it; remember that lead-in Wire W–151 provides most of the signal pickup at the lower frequencies involved.
(3) For the reception of signal frequencies within a band whose end frequencies are related in the ratio of 1 to 2, say from 10 to 20 mc, the distance between the inner ends of each arm of the doublet antenna should be 1.3 percent of the doublet antenna length. Use two Insulators IN–124, interconnected with a section of Rope RP–3 cut to provide the spacing. The height of the *V* formed by connecting the conductors of lead-in Wire W–151 to the doublet antenna is not critical. This doublet antenna acts as a double *L* for the reception of much lower frequencies (for example, 3.5 mc). Use the midband frequency (15 mc) to make the calculation.

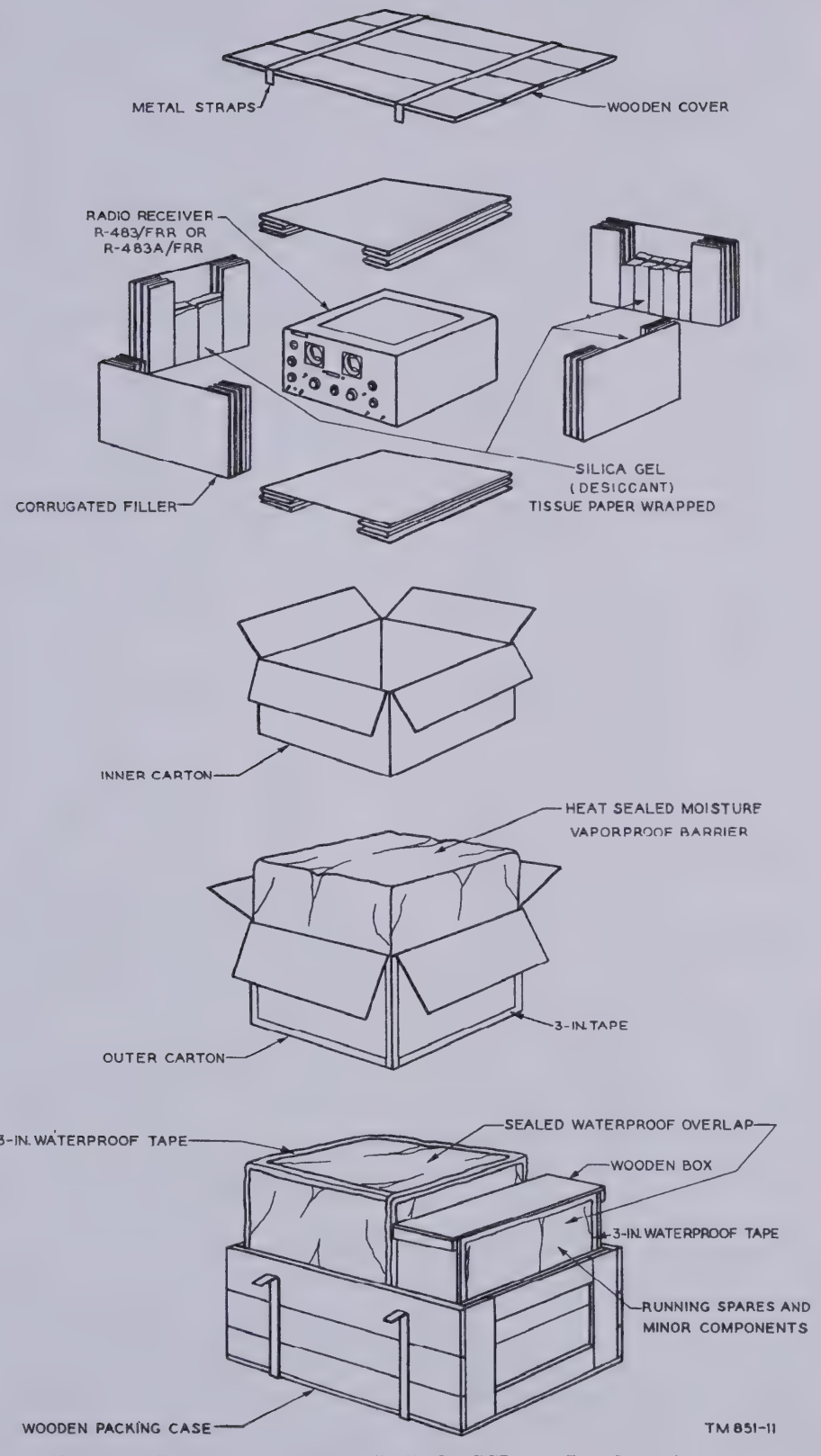

Figure 12. Packing and packaging Radio Set SCR–244–D and running spares.

c. Place the coiled 150-foot length of Wire W–152 at the location previously chosen and uncoil it. Then cut it with a pair of cutters to the doublet antenna length calculated; allow a total of 16 inches extra for assembly. Then double it, cut it in half and place end to end.

d. Connect strain Insulator IN–125 to the outer ends of each length of antenna wire by utilizing one of the holes in each insulator; wind the free end of the wire through the hole, to the extent of the 4 inches allowed, and then twist it on itself.

Note.—If the doublet antenna is to have added length for a lower signal frequency, connect half the added length, in a like manner to each of the other holes in Insulators IN–125, and then connect another Insulator IN–125 to the free end of each added length of Wire W–152. Twist jumper wire W–152 to doublet antenna Wire W–152 on either side of Insulators IN–125 and solder it.

e. Cut Rope RP–3 into two parts and connect each to one of the free holes in one Insulator IN–125.

Note.—Cut Rope RP–3 so that the doublet antenna, when mounted, centers the available open space between the structures to be used to mount it.

f. Connect the two conductors of lead-in Wire W–151, cleared of all insulation, one to each outermost hole in Insulator IN–124.

g. Connect the free end of each section of doublet antenna Wire W–152, cleared of its enamel insulation, one to each innermost hole in Insulator IN–124, so that each can be spliced (and soldered) to the conductor of lead-in Wire W–151 adjacent to it.

h. Uncoil lead-in Wire W–151 fully and, in turn, with Rope RP–3, mount the doublet antenna; use the available structures (par. 16) for mounting it.

(1) For signal frequency reception above 30 mc, mount the doublet antenna as high above ground as possible (several wavelengths). For signal frequency reception (3 to 30 mc), mount the doublet antenna under one-fourth wavelength above ground for short distance reception (up to 200 miles); for long distance reception, heights approaching one-half wavelength are advantageous, especially at the higher end (20 to 30 mc) of the h-f band. For the reception of the lower signal frequencies, mount the single wire or the double *L* antenna used as high as possible, consistent with the tactical requirements.

(2) Keep the length of lead-in Wire W–151 as short as possible to be consistent with the doublet antenna heights recommended and the tactical requirements.

i. Connect the receiver antenna input plug P2 (Radio Frequency Plug UG–102/U) to the receiver end of lead-in Wire W–151. To do this, remove the insulation (1½ inches) from each conductor, fit one conductor into each terminal of plug P2, solder at the terminal ends, and snip off the excess conductor protruding at each terminal.

24. Installation of Radio Receivers (All Types)

a. To provide for a-c power, determine that the available a-c power source voltage and frequency are suited to the radio receiver (par. 5). Connect the a-c power input cable to the tap terminal of T8 whose voltage rating is closest in agreement to the available voltage of the power source. The tap voltage ratings of T8 are as follows:

Tap No.	Voltage rating
2	95
3	105
4	117
5	130
6	190
7	210
8	234
9	260

b. Open the top hinged cover of the table cabinet or remove the rack-mounting top cover, as applicable, and see that all tubes are seated firmly in their proper sockets (figs. 13 and 14).

c. Provide the receiver with an external ground (par. 16).

d. Close the table-cabinet cover or replace the rack-mounting top cover, as applicable.

e. Place the receiver in the proper operating position.

25. Connections for Radio Set SCR–244–D

The connections between the various operating components of a radio set employing any one of these receivers are shown in figure 15.

Note.—When the equipment is installed in a vehicle, the connections below are generally applicable.

a. Connect the Headset Cord, Navy type No. 3W–49534, by its Plug PL–55 to the PHONES jack on the front panel of either Radio Receiver R–483/FRR or R–483A/FRR.

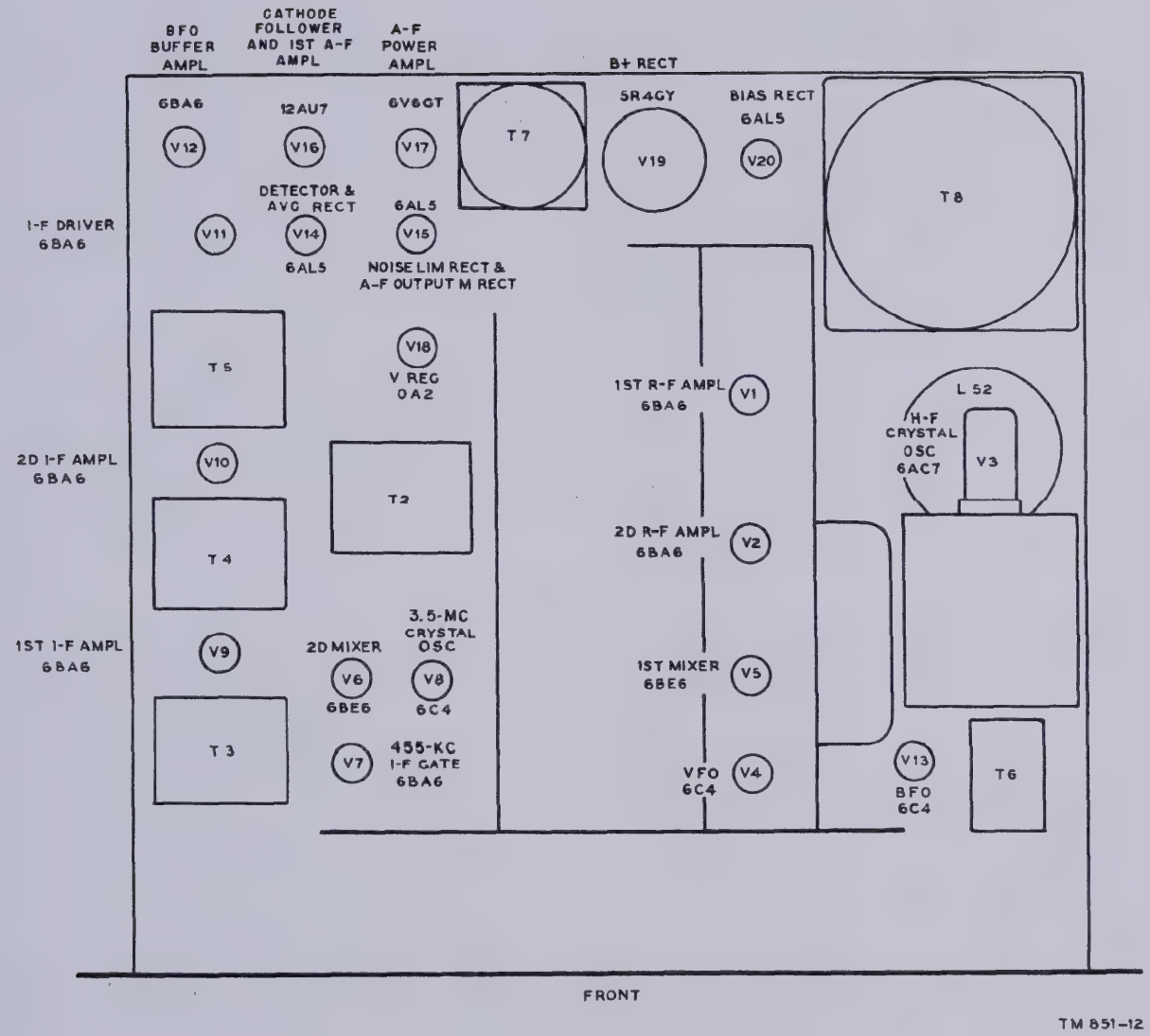

Figure 18. Radio Receivers R–274A/FRR and R–274C/FRR, tube location.

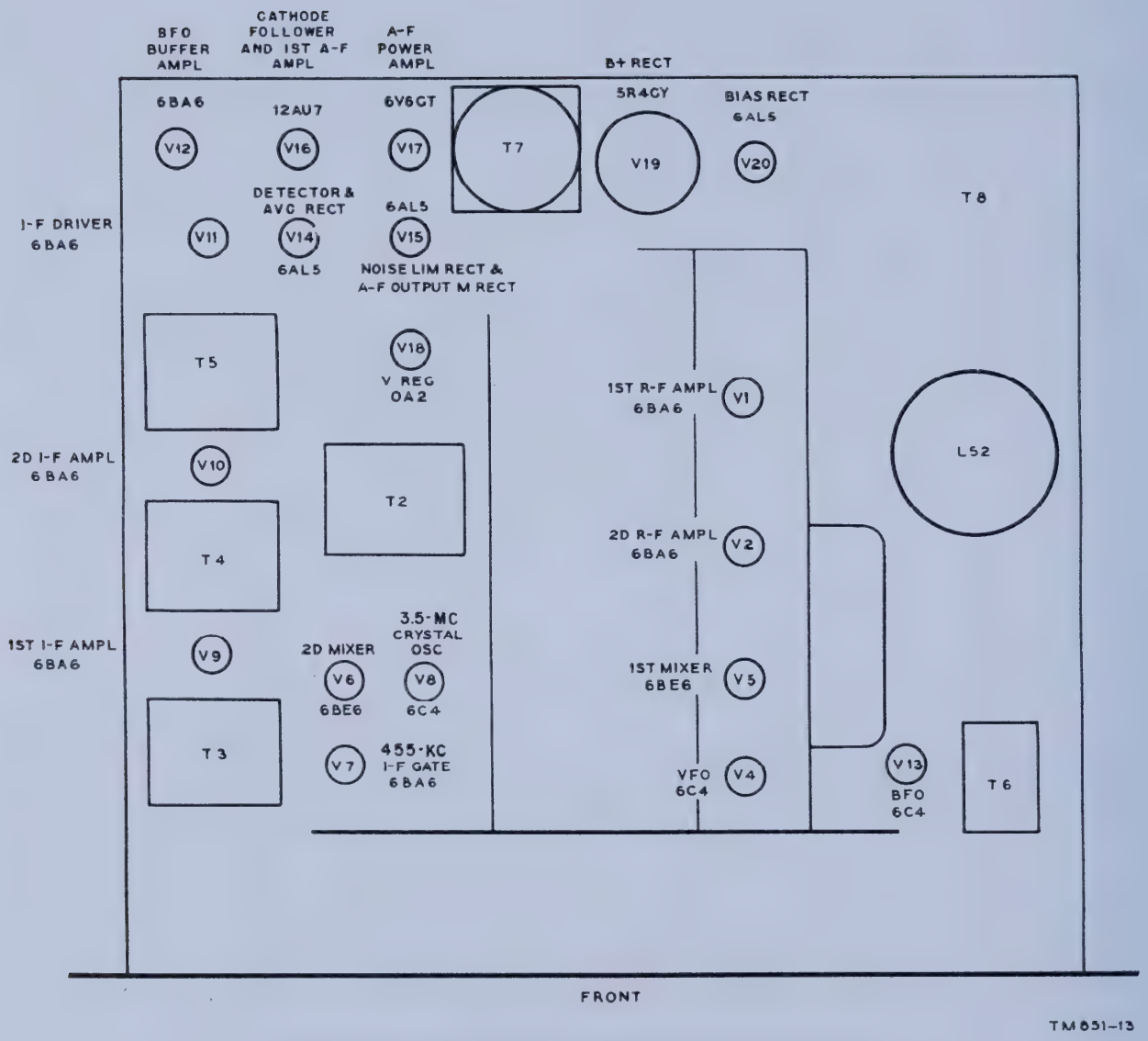

Figure 14. Radio Receivers R–320A/FRC, R–483/FRR, and R–483A/FRR, tube location.

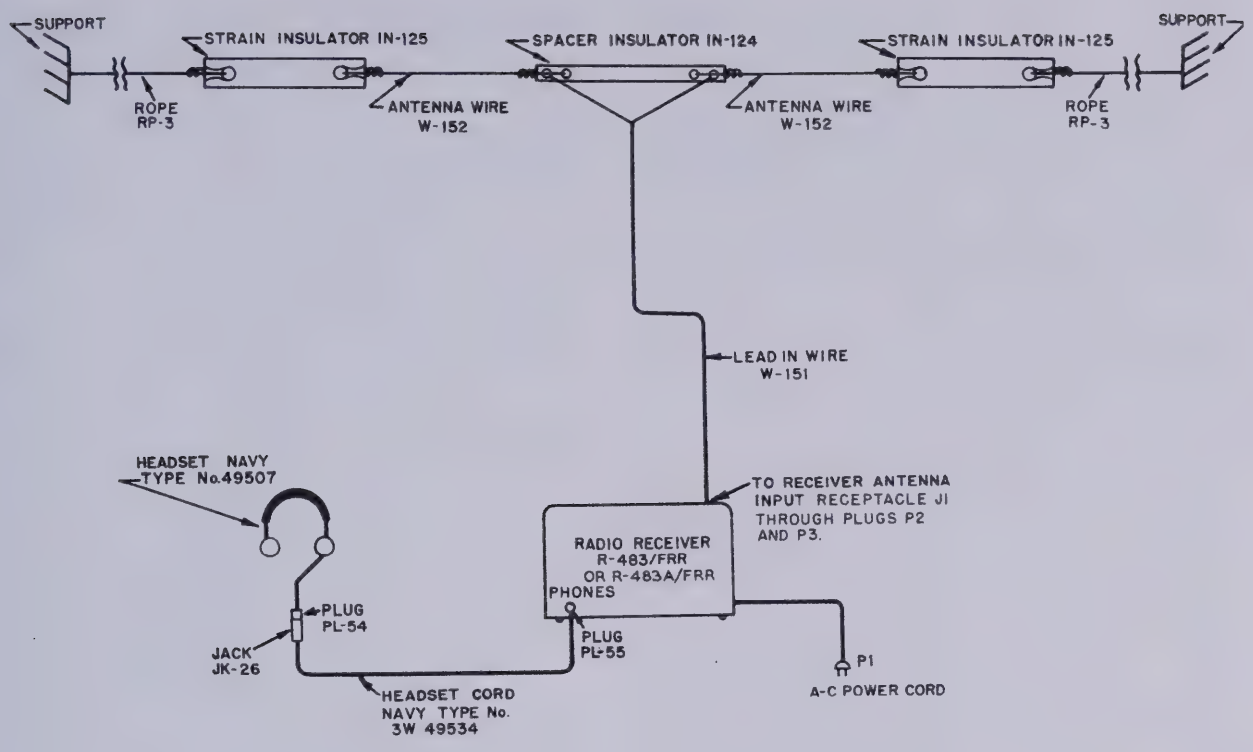

TM 851-14

Figure 15. Radio Set SCR–244–D, cording diagram.

b. Connect the Headset, Navy type No. 49507 by its Plug PL–54 to Jack JK–26 at the other end of Headset Cord, Navy Type No. 3W–49534.

Caution: Connect a 600-ohm, 5-watt resistor across the AUDIO OUTPUT terminals when these connections are not used.

c. Connect the doublet antenna system (par. 23) to Radio Receiver R–483/FRR or R–483A/FRR by connecting the receiver antenna system input plug P2 (par. 23) to the receiver antenna adapter connector Plug P3 (Type Radio Frequency Adapter UG–104/U) and in turn connected to ANT input receptacle J1 (Radio Frequency Receptacle UG–103/U).

d. Turn the RF GAIN control fully counterclockwise to its OFF position and insert plug P1 into the a-c power source.

26. Service upon Receipt of Used or Reconditioned Equipment

a. Follow the instructions for uncrating, unpacking, and checking the equipment (par. 22).

b. Check the used or reconditioned equipment for tags or other indications pertaining to changes in the wiring of the equipment. If any changes in wiring have been made, note the change in this manual, preferably on the applicable schematic diagram.

c. Check the operating controls for their proper functioning. If lubrication is indicated, refer to the lubrication instructions in paragraphs 43 through 45.

d. Perform the installation and connection procedures given in paragraphs 23, 24, and 25, as applicable.

Section II. CONTROLS AND INSTRUMENTS

27. General

Haphazard operation or improper setting of the controls can cause damage to electronic equipment. For this reason, it is important to know the function of every control.

28. Radio Receiver (All Types) Controls

(figs. 16, 17, and 18)

The following table lists the controls of the radio receiver, all types:

Control	Function
RF GAIN control (R93).	In OFF position, disconnects receiver from a-c power source. In ON position increases the r-f and i-f gain of the receiver when advanced in a clockwise direction.
SEND-REC switch (S9).	In SEND position, disables the receiver but leaves a-c power on for instant reception in REC position.
MOD-CW switch (S7).	In MOD position, provides for voice or mcw reception and, in CW position, for c-w reception. In CW position, switches on the bfo and switches in an additional capacitor to the avc circuitry so that avc may be effective for the reception of high-speed c-w signals.
AVC-MAN switches (S8).	In AVC position, provides for delayed avc of the r-f and i-f stages of the receiver for a chosen setting of the RF GAIN control (R93). Also, the meter (M1) is switched in to provide for a db-level indication of the r-f signal strength in relation to 1 microvolt. In MAN position provides for the manual control of the receiver r-f and i-f gain as determined by the setting of the RF GAIN control. In Radio Receiver R–320A/FRC, the i-f gain is further determined by the setting of the IF GAIN control (R211).
LIMITER-OFF switch (S6).	In LIMITER position, switches *in* a capacitor to the noise limiter rectifier circuitry to provide for eliminating noise, if any, from the audio output of the receiver. In OFF position the noise limiter is inoperative.
AUDIO GAIN control (R84).	A potentiometer which increases the input to the audio amplifier of the receiver, when advanced in a clockwise direction.
IF GAIN control (R211) (In Radio Receiver R–320A/FRC only).	Used to vary the i-f gain of the receiver to any level below that determined by the setting of the RF GAIN control (R93).
METER RF-AF spring-return switch (S11).	In normal RF position, meter M1 provides a db-level indication of the r-f signal strength in relation to 1 microvolt, when the AVC-MAN switch S8 is at AVC. In the held-depressed AF position, meter M1 provides a db-level indication of the audio output of the receiver in relation to the standard reference level output of 6 milliwatts across 600 ohms.
BAND CHANGE switch (S1A, S1B, S1C, S1D).	A turret system comprising a 6-position, 4-section base and pin rotor and spring stator assembly; each position provides for indenting one of the 6 frequency bands of the receiver. The range of the frequency band indented is that indicated on the dial visible through the MEGACYCLES window.
TUNING control (C1A through H).	Controls the setting of a variable-air, 8-section, 4-gang tuning capacitor used to resonate the desired signal frequency. A TUNING LOCK is provided which clamps the vernier dial of the tuning gear-train mechanism, and there prevents the main dial and tuning capacitor from shifting after setting, even though the TUNING control knob remains free to turn.
SELECTIVITY switch (S5A, S5B, S5C).	The 6-position, 3-wafer switch which provides a choice as to .2-kc, .5-kc, 1.3-kc XTAL and 3-kc, 8-kc, and 13-kc NON-XTAL positions of receiver selectivity; the receiver attenuation is 6-db down at these bandwidths from that at the midband values.

Control	Function
XTAL PHASING control (C111).	The two-section stator, single-section, rotor variable-air capacitor which is rotated in either direction to highly attenuate heterodyne interference closely adjacent to the desired signal. This control is effective only in the XTAL positions of the SELECTIVITY switch (S5A, S5B, S5C).
BEAT OSC. control (L45).	The adjustable tuning core of one of the inductance coils which determines the frequency of operation of the bfo. Turning the control knob in either direction provides for tone output up to 3 kc when the mode of operation is cw.
VFO-XTALS 1, 2, 3, 4, 5, 6, switch (S2 and S3) (In Radio Receivers R–274A/FRR and R–274C/FRR only).	In VFO position, switches the receiver for continuously variable frequency operation. In any one of the 6 switch positions the receiver is switched for fixed-frequency crystal-controlled operation at the signal frequency for which the crystal chosen by the switch position is intended to be used.
ΔFREQ HIGH-LOW control (C65) (In Radio Receivers R–274A/FRR and R–274C/FRR only).	Used in fixed-frequency, crystal-controlled operation to accurately tune in the signal, the control providing for a plus and minus .005-percent adjustment in the crystal frequency of the crystal chosen by the XTALS switch.
PHONES jack (J3)	Used to plug-connect a headset.
PHONO inlet (E1) (In Radio Receivers R–483/FRR, R–274A/FRR, and R–320A/FRC only).	Two-screw terminal board (figs. 5, 7, and 9) to provide for phonograph pickup input to the receiver.
DIODE OUTPUT-AVC terminal board E3 (In Radio Receivers R–274C/FRR, R–320A/FRC, and R–483A/FRR only).	DIODE OUTPUT terminals provide for use of the receiver d-c output to operate recording equipment, and for diversity connections. AVC terminals make available avc voltages for external use.
RELAY receptacle (J4) (In Radio Receivers R–483/FRR, R–274A/FRR, and R–320A/FRC only).	Female connector for plug connecting an external relay to the receiver. The relay, in parallel with SEND-REC switch S9 in its SEND position, provides for hand microphone *press-to-talk* switching from REC to SEND.
AC outlet (J5)	Female connector for plug connecting auxiliary equipment suited to operate at the available line voltage and frequency used. It is rated at 3-ampere, 250-volt ac.
BFO INJ adjustment control (R74).	Used to adjust the bfo buffer amplifier output to the detector and avc rectifier for c-w reception. This control is factory-adjusted for maximum output.
METER ADJ RF adjustment control (R69).	This control is set at the factory to calibrate the M1 meter r-f scale.
METER ADJ AF adjustment control (R 101).	This control is set at the factory to calibrate the M1 meter a-f scale.
IF OUTPUT coaxial cable connector (J2)	This connector is used to provide the receiver i-f output to a 70-ohm coaxial cable and matching associated equipment load.
AUDIO OUTPUT-600 ohms terminal board E2.	Provides means of connecting 600-ohm resistive impedance load to receiver.
ANT input connector (J1).	This connector is used to connect the receiver antenna system, through the P2 and P3 connectors, to the receiver.
Avc grid return connections (at E13) (in Radio Receiver R–274C/FRR, serial No. 1570 and above only).	The normal grid return avc rear screw terminal connection (fig. 68) is used for the normal operation of the receiver; the front screw terminal connection is used for the direction finder use of the receiver.

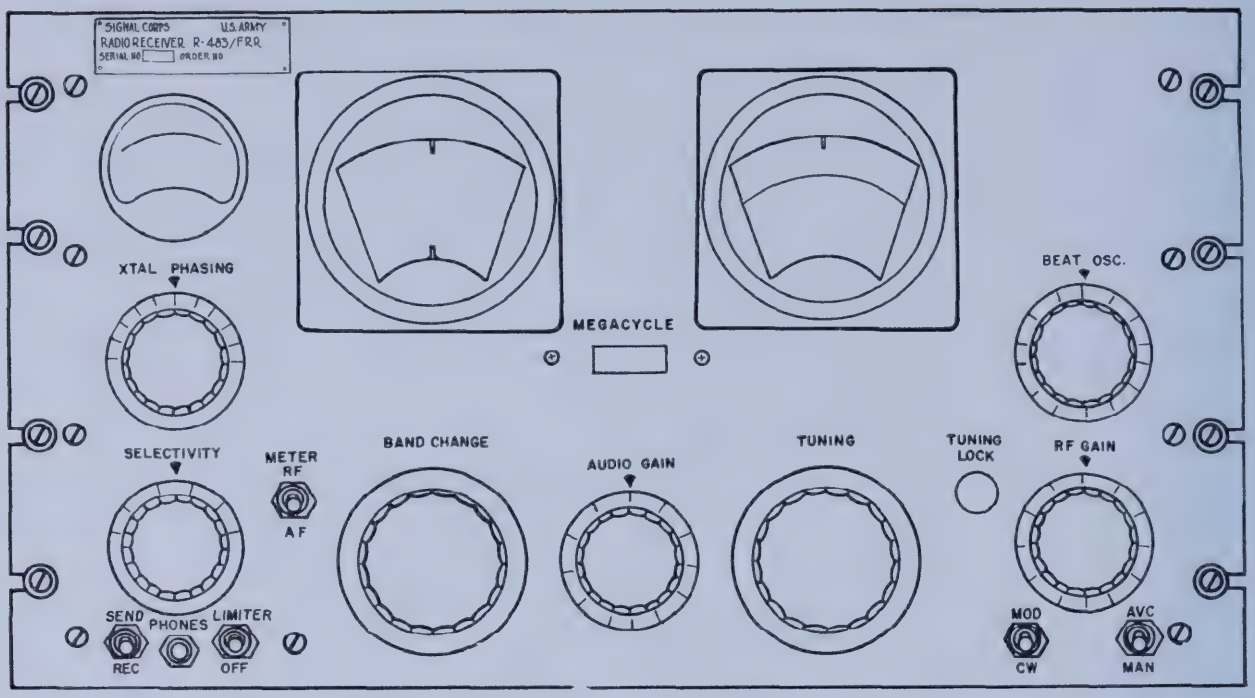

Figure 16. Radio Receivers R–483/FRR and R–483A/FRR, front panel.

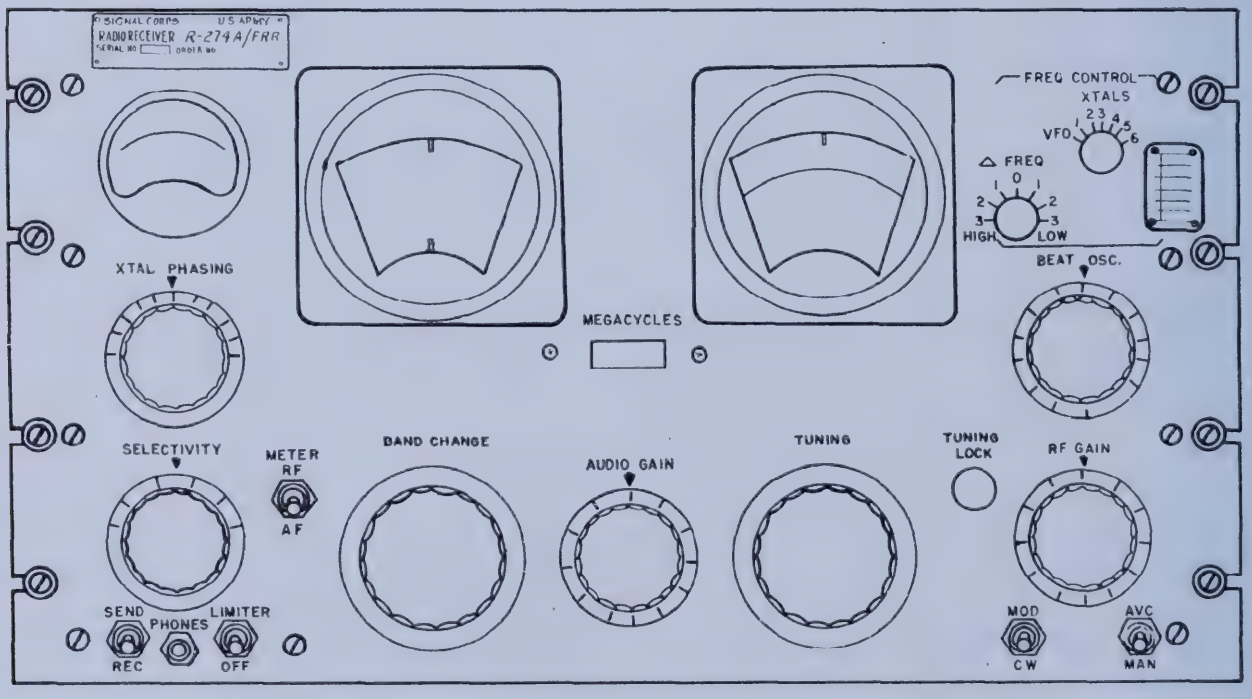

Figure 17. Radio Receivers R–274A/FRR and R–274C/FRR, front panel.

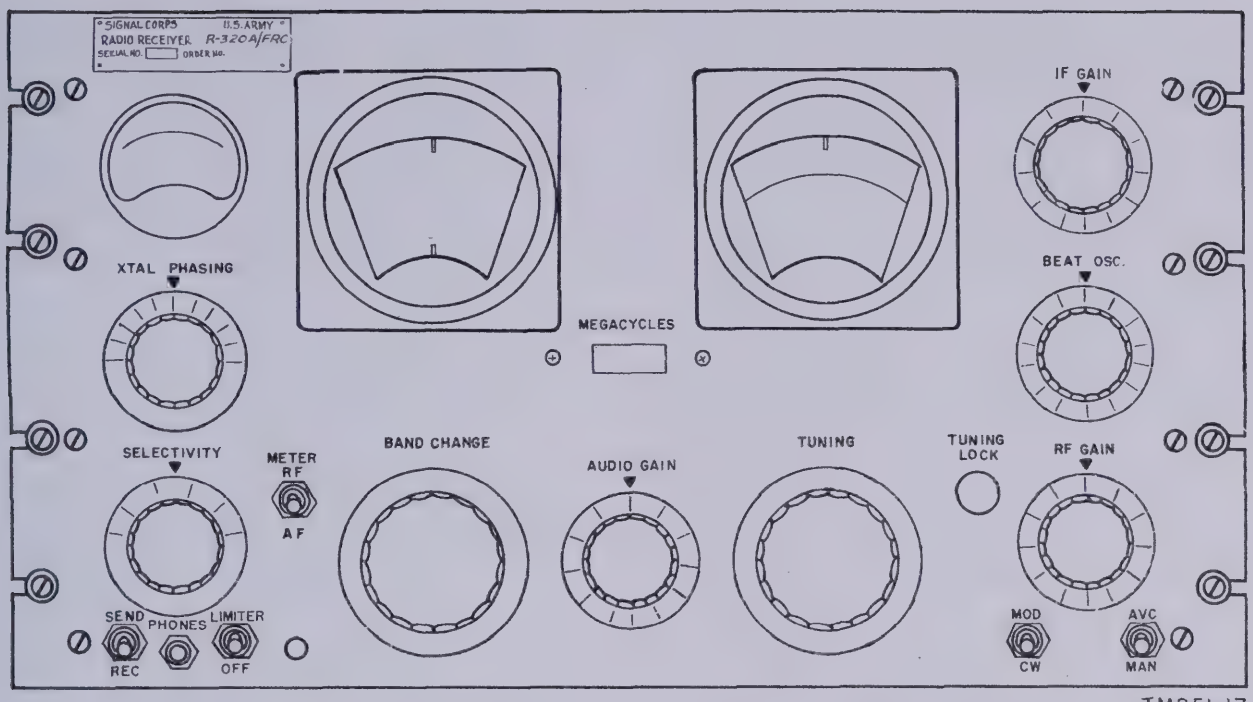

TM851-17

Figure 18. Radio Receiver R–320A/FRC, front panel.

Section III. OPERATION UNDER USUAL CONDITIONS

29. Starting Procedure

a. Selection of Crystals.

(1) In Radio Receivers R–274A/FRR and R–274C/FRR, provision is made for the crystal-controlled reception up to six frequencies. When the proper crystal frequencies are determined ((2) below), insert the crystals (type Crystal Unit CR–18/U) to be used, each in crystal holder X21 (fig. 63 or 64) assigned to it. Mark the signal frequency for which each crystal is intended opposite the numeral on the plastic chart that corresponds to the numeral of the crystal holder assigned each crystal.

(2) The chart below lists the signal frequency ranges. The intermediate frequency is added to the signal frequency to determine the crystal frequency. Each crystal used in the h-f oscillator has a frequency tolerance of ±.005 percent. Since a signal frequency of 7.4 mc may be received on the 3.45- to 7.40-mc band and also on the 7.40- to 14.8-mc band, it is necessary to identify the receiver frequency band for which a 7.40-mc (signal frequency) crystal is intended.

Signal frequency (mc)	Intermediate frequency (mc)	Crystal frequency (mc)
1.35 through 7.40 (bands 2 and 3)	0. 455	1.805 through 7.855.
7.40 through 29.7 (bands 4 and 5)	3. 955	3.785 through 11.218333.*

*The third harmonic mode of operation of crystals is used; hence, the result obtained is divided by three.

b. Preliminary. Set the front panel controls as shown in the following table.

Control or switch	*Position*
SEND-REC (S9)	REC.
TUNING LOCK	Unclamp.
XTAL PHASING (C111)	On diamond.
SELECTIVITY (S5A, B, C)	NON-XTAL 3 kc.
BAND CHANGE (S1A, B, C, D).	To desired range.
TUNING (C1A thru H)	To desired frequency.
RF GAIN (R93)	In OFF position.
AUDIO GAIN (R84)	Maximum clockwise.
IF GAIN (R211) (in Radio Receiver R–320A/FRC only).	Maximum clockwise.
VFO-XTALS (in Radio Receivers R–274A/FRR and R–274C/FRR only).	VFO or the desired XTALS positions.

c. Starting. Turn RF GAIN control clockwise. A *click* will be heard and the pilot lamps will light. After about 1 minute, rotate the RF GAIN control fully clockwise; noise or signals should be heard in the headset. If noise or signals are not heard, refer to the equipment performance checklist (par. 52); otherwise, rotate the AUDIO GAIN control counterclockwise to a position providing for comfortable reception.

Note.—Perform the starting procedure 15 minutes prior to use to allow the equipment to warm up.

30. Reception of Voice or Mcw Signals

a. General. To provide for the reception of voice or mcw signals, follow the starting procedure (par. 29) and continue as follows:

(1) Switch the MOD-CW switch to MOD.
(2) Switch the AVC-MAN switch to AVC.
(3) Set the RF GAIN control to its maximum clockwise position.
(4) Set the AUDIO GAIN control at a position providing for comfortable reception.
(5) Turn the TUNING control in either direction to resonate the signal as is the case when meter M1 indication is a maximum. At resonance, the main dial frequency reading should be within ¼ of 1 percent of the desired signal frequency tuned in.
(6) Clamp the TUNING LOCK by turning it clockwise, if desired.
(7) Readjust the AUDIO GAIN control to a position for comfortable reception.

b. Operating Adjustments in Presence of Noise.

(1) Switch the SELECTIVITY switch to the position that provides the most intelligible reception for the quality of the received signal.
(2) If the SELECTIVITY switch is used in one of its XTALS positions, turn the XTAL PHASING control to a position that phases out an interfering signal, if any.
(3) Switch the LIMITER-OFF switch to the LIMITER position to eliminate ignition noise, and others, if any.
(4) Set the RF GAIN control to obtain maximum signal-to-noise ratio.

c. Tuning to a Weak Signal in Presence of Noise. To distinguish the weak signal from other signals or interference of any kind, use is made of the receiver bfo to zero-beat the signal to resonance. Since the 0 knob dial setting of the BEAT OSC. control may not correspond exactly to 455 kc, a strong mcw or c-w signal is tuned in first to set the control properly.

(1) Switch the MOD-CW switch to CW and indent the BAND CHANGE switch to the MEGACYCLES window tuning range dial indication for the frequency band in which the strong signal frequency is located.
(2) Tune in the strong signal by turning the TUNING control in either direction to resonate the strong signal frequency accurately, with the indication on the meter at a maximum.
(3) Then adjust the BEAT OSC. control for zero beat audio output, and maintain this setting for it.
(4) Now, indent the BAND CHANGE switch to the MEGACYCLES window tuning range dial indication for the frequency band in which the desired signal frequency is located and turn the TUNING control in either direction to resonate the desired signal for zero beat audio output.
(5) Switch the MOD-CW switch back to MOD, clamp the TUNING LOCK by turning it clockwise, if desired, and reset the AUDIO GAIN control to a position for comfortable reception.

d. Mcw or Voice Fixed Frequency Crystal-controlled Operation of Radio Receivers R–274A/FRR and R–274C/FRR.

(1) Follow the starting procedure outlined in paragraph 29 and continue as follows:
(2) Switch the XTALS switch to its 1, 2, 3, 4, 5, or 6 crystal position whose numeral designation corresponds to that of the crystal holder that carries the crystal suited to the desired signal frequency. The XTALS switch position is determined readily by noting the numeral on the plastic chart alongside of which the signal frequency is recorded.
(3) Switch the MOD-CW switch to MOD.
(4) Switch the AVC-MAN switch to AVC.
(5) Set the RF GAIN control to its maximum clockwise position.
(6) Set the AUDIO GAIN control at a position providing for comfortable reception.
(7) Turn the Δ FREQ control in either direction on the scale to resonate the signal, as is the case when the indication on the meter is a maximum.

Note. This crystal vernier provides for a variation of ±50 cycles for each megacycle of signal frequency.

(8) Turn the TUNING control in either direction to resonate the signal further, as is the case when the indication on the meter is a maximum.
(9) Clamp the TUNING LOCK by turning it clockwise, if desired.
(10) Readjust the AUDIO GAIN control to a position for comfortable reception.

31. Reception of C-W or Frequency-Shift Signals

a. General. To provide for the reception of c-w or frequency-shift signals, follow the starting procedure outlined in paragraph 29 and continue as follows:

(1) Switch the MOD-CW switch to CW.
(2) Switch the AVC-MAN switch to MAN for low-speed signal reception and to AVC for high-speed signal reception. Remember that the meter provides only an r-f signal indication in the AVC position of the switch.
(3) Set the BEAT OSC. control to its 0 knob dial position.
(4) Turn the RF GAIN control clockwise to a position below that at which the receiver noise output is blocked off, when the AVC-MAN switch (S8) is in the MAN position, and full on, when S8 is in the AVC position.
(5) Set the AUDIO GAIN control to a position providing for comfortable reception.
(6) Turn the TUNING control in either direction for maximum indication on meter M1 to resonate a high-speed signal. At resonance, the main dial frequency reading should be within ¼ of 1 percent of the desired signal frequency tuned in.

Note.—To tune in a low-speed or a high-speed c-w signal, the TUNING control setting for zero beat audio output also provides for resonating the signal. To tune in a low-speed frequency-shift signal, the TUNING control setting that results in a maximum indication on meter M1 provides for approximately resonating the signal; precise tuning usually is governed by indicators on radioteletypewriter converters.

(7) Clamp the TUNING LOCK by turning it clockwise, if desired.
(8) Turn the BEAT OSC. control in either direction to get single tone output (preferably around 1,000 cps) for c-w reception or two-tone output (as required for auxiliary equipment) for frequency-shift reception. C-w reception may be better with the control turned in one direction as compared to reception when turned in the other direction. In any case, choose the position in the direction that provides for the most intelligible signal.

Note.—Apart from low-speed c-w signal intelligence, the receiver requires auxiliary equipment to reproduce, usually mechanically, high-speed and frequency-shift signals received (par. 4). However, signals may be monitored through use of a headset or loudspeaker connected to the receiver.

(9) Readjust the RF GAIN control for clearest signal and the AUDIO GAIN control to a position for comfortable reception.

b. Operating Adjustments in Presence of Noise.

(1) Switch the SELECTIVITY switch to the XTALS position that provides the best reception.

2) Turn the XTAL PHASING control to a position that phases out an interfering signal, if any.

(3) Switch the LIMITER-OFF switch to the LIMITER position to eliminate ignition noise, and other noises, if any are present.

(4) Monitor the RF GAIN by adjusting it manually to the position that provides the clearest signal, and readjust the AUDIO GAIN control to a position for comfortable reception.

c. Tuning to a Weak Signal in Presence of Noise. To distinguish a weak signal from other signals or interference of any kind, use is made of the receiver bfo to zero-beat the signal to resonance. A strong mcw or c-w signal is used (par. 30*c*) to set the BEAT OSC. control properly.

(1) Switch the AVC-MAN switch to AVC.

(2) Indent the BAND CHANGE switch to the MEGACYCLES window tuning range dial indication for the frequency band in which a strong signal frequency is located.

(3) Tune in the strong signal by turning the TUNING control in either direction to resonate this signal accurately with the indication on the meter at a maximum.

(4) Then adjust the BEAT OSC. control for zero beat audio output, and maintain this setting for it.

(5) Indent the BAND CHANGE switch to the MEGACYCLES window tuning range dial indication for the frequency band in which the desired signal frequency is located, and turn the TUNING control in either direction to resonate the desired signal for zero beat audio output.

(6) Leave the AVC-MAN switch on AVC for the reception of high-speed signals and switch it to MAN for the reception of low-speed signals.

(7) Clamp the TUNING LOCK by turning it clockwise, if desired.

(8) Readjust the RF GAIN control for clearest signal and the AUDIO GAIN control to a position for comfortable reception.

d. C-w Fixed Frequency Crystal-controlled Operation of Radio Receivers R–274A/FRR and R–274C/FRR.

(1) Follow the starting procedure (par. 29) and continue as follows:

(2) Switch the XTALS switch to its 1, 2, 3, 4, 5, or 6 crystal position whose numeral designation corresponds to that of the crystal holder that carries the crystal suited to the desired signal frequency. The XTALS switch position is determined readily by noting the numeral on the plastic chart alongside of which the signal frequency is recorded.

(3) Switch the MOD-CW switch to CW.

(4) Switch the AVC-MAN switch to MAN for low-speed signal reception and to AVC for high-speed signal reception. Remember that the meter provides only an r-f signal indication in the AVC position of the switch.

(5) Set the BEAT OSC. control to its 0 knob dial position.

(6) Turn the RF GAIN control clockwise to a position below that at which the receiver noise output is clocked off when the AVC-MAN switch (S8) is in the MAN position, and full on, when S8 is in the AVC position.

(7) Set the AUDIO GAIN control to a position providing for comfortable reception.

(8) Turn the Δ FREQ control in either direction on the scale for maximum indication on meter M1 to resonate a high-speed signal.

Note.—To tune in a low-speed or high-speed c-w signal, the Δ FREQ control setting for zero beat audio output also provides for resonating the signal. To tune in frequency-shift signals, the Δ FREQ control setting is governed by requirements of the associated teletypewriter equipment. This crystal vernier provides for a variation of ±50 cycles for each megacycle of signal frequency.

(9) Turn the TUNING control in either direction to resonate the signal further, as is the case when the indication on meter M1 is a maximum.

Note.—For low-speed signals, temporarily switch the AVC-MAN switch to AVC so that meter M1 will provide an indication.

(10) Clamp the TUNING LOCK by turning it clockwise, if desired.

(11) Turn the BEAT OSC. control in either direction to get tone output (par. 31*a*(8)). Reception may be better with the control turned in one direction as compared to reception when turned in the other

direction. In any case, choose the position in the direction that provides for the most inteiligible reception.

(12) Readjust the RF GAIN control for the clearest signal and the AUDIO GAIN control to a position for comfortable reception.

32. Stopping Procedure

a. Standby. Turn the SEND-REC switch to SEND.

b. Off. Turn the RF GAIN control counterclockwise to the OFF position.

Section IV. OPERATION UNDER UNUSUAL CONDITIONS

33. General

Any one of the receiver types may be required to provide for reception in regions where extreme cold, heat, humidity and moisture, sand conditions, etc., prevail. In the following paragraphs instructions are given on procedures for minimizing the effect of these unusual operating conditions.

34. Operation in Arctic Climates

Subzero temperatures and climatic conditions associated with cold weather affect the efficient operation of the equipment. Instructions and precautions for operation under such adverse conditions follow:

a. Handle the equipment carefully.

b. Keep the equipment warm and dry. If the radio receiver is not in a heated inclosure and is not provided with means to insulate it, keep the radio receiver turned on with the SEND-REC switch in the SEND position, so that the necessary heating is provided by the vacuum-tube filaments. In any case, do not resort to any means that will overtax the available a-c power supply source.

c. When the radio receiver is inside a heated inclosure, locate it so that there is no danger of a cold draft striking the vacuum tubes through the side, top, and rear vents in the receiver cabinet. If the inclosure is so constructed that this precaution is impossible, place a blanket or some barrier between the source of the draft and the radio receiver. Follow similar precautions when the receiver is installed in its rack mounting.

d. The headset of the Radio Set SCR–244–D has rubber earpieces. When operating in the open air with headsets that do not have rubber earpieces, wear a knitted woolen cap over the earphones. Frequently, when headsets without rubber earpieces are worn, the edges of the ears may freeze without the operator being conscious of this condition. Never flex rubber earcaps, since this action may render them useless. If water gets into the headset receivers, or if moisture condenses within them, it may freeze and impede the actuation of the diaphragm. When this happens, remove the bakelite cap and remove the ice and moisture.

e. When equipment which has been exposed to the cold is brought into a warm room, it will sweat until it reaches room temperature. When the equipment has reached room temperature, dry it thoroughly. This condition also arises when equipment warms up during the day after exposure during a cold night.

35. Operation in Tropical Climates

When operated in tropical climates, radio equipment may be installed in tents, huts, or, when necessary, in underground dugouts. When equipment is installed below ground and when it is set up in swampy areas, moisture conditions are more acute than normal in the tropics. Ventilation is usually very poor, and the high relative humidity causes condensation of moisture on the equipment whenever the temperature of the equipment becomes lower than the ambient air. To minimize this condition, place lighted electric bulbs under the equipment.

36. Operation in Desert Climates

a. Conditions similar to those encountered in tropical climates often prevail in desert areas. Use the same measures to insure proper operation of the equipment.

b. The main problem that arises with equipment operation in desert areas is the large amount of sand or dust and dirt entering the moving parts of radio equipment. The ideal preventive precaution is to house the equipment in a dustproof shelter. Since such a building seldom is available, however, and would require air conditioning, the next best precaution is to make the building in which the equipment is located as dustproof as possible with available materials. Hang wet sacking over the windows and doors, cover the inside walls with heavy paper, and

secure the side walls of tents with sand to prevent their flapping in the wind.

c. Never tie power cords, signal cords, or other wiring connections to either the inside or the outside of tents. Desert areas are subject to sudden wind squalls which may jerk the connections loose or break the lines.

d. Keep the equipment as free from dust as possible. Make frequent preventive maintenance checks (ch. 3). Pay particular attention to the condition of the lubrication. Excessive amounts of dust, sand, or dirt that come into contact with oil and grease result in grit, which will damage the equipment.

CHAPTER 3

ORGANIZATIONAL MAINTENANCE INSTRUCTIONS

Section I. ORGANIZATIONAL TOOLS AND EQUIPMENT

37. Tools, Equipment, and Materials Used with Equipment

The tools and materials contained in Tool Equipment TE–41 are listed in the Department of the Army Supply Manual SIG 6–TE–41. The Allen wrenches are mounted at the top of the receiver chassis by two Fahnstock clips.

a. Tools.

1 Tool Equipment TE–41 (6R38041).
1 No. 6 Allen wrench (6R57400–6).
1 No. 8 Allen wrench (6R57400).
1 No. 10 Allen wrench (6R55496).
1 Pliers, special (par. 38) (6R4625–3).

b. Equipment.

1 Electron Tube Test Set TV–7/U.

c. Materials.

Cheesecloth, bleached, lint-free.*
Carbon tetrachloride.*
Sandpaper, No. 0000 (6Z7500–0000).
Sandpaper, No. 000 (6Z7500–000).
Solvent, Dry Cleaning (SD) (Fed spec No. P–S–661a) (6G236.1).

*Part of Tool Equipment TE–41.

38. Special Tool Used with Radio Receivers (fig. 19)

Only one special tool, a pair of special pliers, is supplied separately to the using organization for maintenance use. The tool acts as a pair of pliers to remove each of the two flat springs that hold in place each of the 24 r-f tuner subassemblies of each radio receiver. Grasping the flat spring at its inward full length edge and pressing downward while pulling inward will provide for removing it.

Section II. PREVENTIVE MAINTENANCE SERVICES

39. Definition of Preventive Maintenance

Preventive maintenance is work performed on equipment (usually when the equipment is not in use) to keep it in good working order so that breakdowns and needless interruptions in service will be kept to a minimum. Preventive maintenance differs from troubleshooting and repair since its object is to prevent certain troubles from occurring. Refer to AR 750–5.

40. General Preventive Maintenance Techniques

a. Use No. 0000 sandpaper to remove corrosion.

b. Use a clean, dry, lint-free cloth (6Z1989) or a dry brush for cleaning.

(1) If necessary, except for electrical contacts, moisten the cloth or brush with solvent (SD); then wipe the parts with a cloth.

(2) Clean electrical contacts with a cloth moistened in carbon tetrachloride then wipe them dry with a dry cloth.

Caution: Repeated contact of carbon tetrachloride with the skin or prolonged breathing of the fumes is dangerous. Make sure adequate ventilation is provided.

c. If available, dry compressed air may be used at a line pressure not exceeding 60 psi to remove dust from inaccessible places; be careful, however,

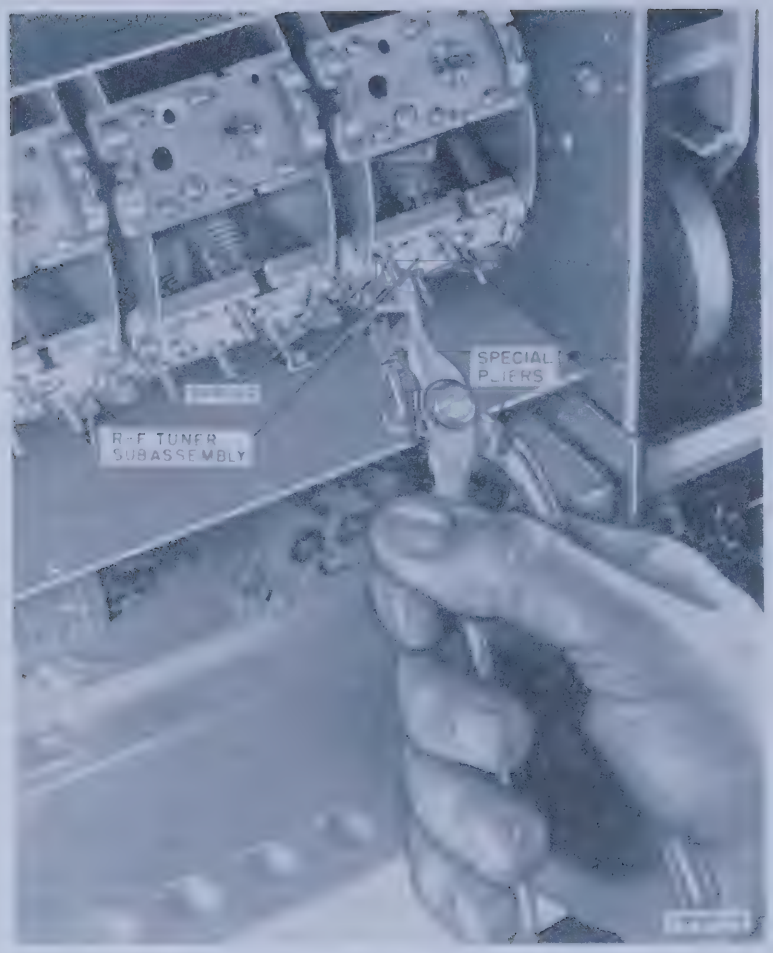

Figure 19. Method of using special pliers.

or mechanical damage from the air blast will result.

d. For further information on preventive maintenance techniques, refer to TB SIG 178.

41. Use of Preventive Maintenance Forms

(figs. 20 and 21)

a. The decision as to which items on DA AGO Forms 11–238 and 11–239 are applicable to this equipment is a tactical decision to be made in the case of first echelon maintenance by the communication officer/chief or his designated representative, and, in case of second and third echelon maintenance, by the individual making the inspection. Instructions for the use of each form appear on the reverse side of the form.

b. Circled items in figures 20 and 21 are partially or totally applicable to the equipment. Reference in the ITEM block refers to paragraphs in text which contain additional maintenance information.

42. Performing Preventive Maintenance

Caution: Tighten screws, bolts, and nuts carefully. Fittings tightened beyond the pressure for which they are designed will be damaged or broken.

a. Exterior.

(1) Check for completeness and satisfactory condition of the components of Radio Set SCR–244–D (par. 7 and fig. 2). Check the components of Radio Receivers R–320A/FRC, R–274A/FRR, and R–274C/FRR in the same way.

(2) Check the suitability of the location and installation for normal operation (pars. 23 and 24).

(3) Remove the dirt and moisture from the antenna system, headset, jacks, plugs, and receiver component parts, as applicable.

(4) Inspect the controls for binding, scraping, excessive looseness, worn or chipped gears, misalinement, and positive action.

OPERATOR FIRST ECHELON MAINTENANCE CHECK LIST FOR SIGNAL CORPS EQUIPMENT

RADIO COMMUNICATION, DIRECTION FINDING, CARRIER, RADAR

INSTRUCTIONS: See other side

EQUIPMENT NOMENCLATURE	EQUIPMENT SERIAL NO.

LEGEND FOR MARKING CONDITIONS: ✓ Satisfactory; X Adjustment, repair or replacement required; (X) Defect corrected.
NOTE: Strike out items not applicable.

DAILY

NO.	ITEM	CONDITION S	M	T	W	T	F	S
1	COMPLETENESS AND GENERAL CONDITION OF EQUIPMENT (*receiver, transmitter, carrying cases, wire and cable, microphones, tubes, spare parts, technical manuals and accessories*). PAR. 42 a (1)							
2	LOCATION AND INSTALLATION SUITABLE FOR NORMAL OPERATION. PAR. 42 a (2)							
3	CLEAN DIRT AND MOISTURE FROM ANTENNA, MICROPHONE, HEADSETS, CHESTSETS, KEYS, JACKS, PLUGS, TELEPHONES, CARRYING BAGS, COMPONENT PANELS. PAR. 42 a (3)							
4	INSPECT SEATING OF READILY ACCESSIBLE "PLUCK-OUT" ITEMS: TUBES, LAMPS, CRYSTALS, FUSES, CONNECTORS, VIBRATORS, PLUG-IN COILS AND RESISTORS. PAR. 42 b (2)							
5	INSPECT CONTROLS FOR BINDING, SCRAPING, EXCESSIVE LOOSENESS, WORN OR CHIPPED GEARS, MISALIGNMENT, POSITIVE ACTION. PAR. 42 a (4)							
6	CHECK FOR NORMAL OPERATION. PAR. 42 a (5)							

WEEKLY

NO.	ITEM	CONDITION	NO.	ITEM	CONDITION
7	CLEAN AND TIGHTEN EXTERIOR OF COMPONENTS AND CASES, RACK MOUNTS, SHOCK MOUNTS, ANTENNA MOUNTS, COAXIAL TRANSMISSION LINES, WAVE GUIDES, AND CABLE CONNECTIONS. PAR. 42 a (6)		13	INSPECT STORAGE BATTERIES FOR DIRT, LOOSE TERMINALS, ELECTROLYTE LEVEL AND SPECIFIC GRAVITY, AND DAMAGED CASES.	
8	INSPECT CASES, MOUNTINGS, ANTENNAS, TOWERS, AND EXPOSED METAL SURFACES, FOR RUST, CORROSION, AND MOISTURE. PAR. 42 a (7)		14	CLEAN AIR FILTERS, BRASS NAME PLATES, DIAL AND METER WINDOWS, JEWEL ASSEMBLIES. PAR. 42 a (12)	
9	INSPECT CORD, CABLE, WIRE, AND SHOCK MOUNTS FOR CUTS, BREAKS, FRAYING, DETERIORATION, KINKS, AND STRAIN. PAR. 42 a (8)		15	INSPECT METERS FOR DAMAGED GLASS AND CASES. PAR. 42 a (13)	
10	INSPECT ANTENNA FOR ECCENTRICITIES, CORROSION, LOOSE FIT, DAMAGED INSULATORS AND REFLECTORS. PAR. 42 a (9)		16	INSPECT SHELTERS AND COVERS FOR ADEQUACY OF WEATHER-PROOFING.	
11	INSPECT CANVAS ITEMS, LEATHER, AND CABLING FOR MILDEW, TEARS, AND FRAYING. PAR. 42 a (10)		17	CHECK ANTENNA GUY WIRES FOR LOOSENESS AND PROPER TENSION. PAR. 42 a (14)	
12	INSPECT FOR LOOSENESS OF ACCESSIBLE ITEMS: SWITCHES, KNOBS, JACKS, CONNECTORS, ELECTRICAL TRANSFORMERS, POWERSTATS, RELAYS, SELSYNS, MOTORS, BLOWERS, CAPACITORS, GENERATORS, AND PILOT LIGHT ASSEMBLIES. PAR. 42 a (11)		18	CHECK TERMINAL BOX COVERS FOR CRACKS, LEAKS, DAMAGED GASKETS, DIRT AND GREASE.	

19 IF DEFICIENCIES NOTED ARE NOT CORRECTED DURING INSPECTION, INDICATE ACTION TAKEN FOR CORRECTION. PAR. 42b (13)

DA AGO FORM 1 MAY 51 11-238 REPLACES DA AGO FORM 419, 1 DEC 50, WHICH IS OBSOLETE.

Figure 20. DA AGO Form 11–238.

SECOND AND THIRD ECHELON MAINTENANCE CHECK LIST FOR SIGNAL CORPS EQUIPMENT
RADIO COMMUNICATION, DIRECTION FINDING, CARRIER, RADAR

INSTRUCTIONS: See other side

EQUIPMENT NOMENCLATURE | EQUIPMENT SERIAL NO.

LEGEND FOR MARKING CONDITIONS: ✓ Satisfactory; X Adjustment, repair or replacement required; (X) Defect corrected.
NOTE: Strike out items not applicable.

NO.	ITEM	CONDITION
1	COMPLETENESS AND GENERAL CONDITION OF EQUIPMENT *(receiver, transmitter, carrying cases, wire and cable, microphones, tubes, spare parts, technical manuals and accessories).* PAR. 42a (1)	
2	LOCATION AND INSTALLATION SUITABLE FOR NORMAL OPERATION. PAR. 42a (2)	
3	CLEAN DIRT AND MOISTURE FROM ANTENNA, MICROPHONE, HEADSETS, CHESTSETS, KEYS, JACKS, PLUGS, TELEPHONES, CARRYING BAGS, COMPONENT PANELS. PAR 42a(3)	
4	INSPECT SEATING OF READILY ACCESSIBLE "PLUCK-OUT" ITEMS: TUBES, LAMPS, CRYSTALS, FUSES, CONNECTORS, VIBRATORS, PLUG-IN COILS AND RESISTORS. PAR. 42b (2)	
5	INSPECT CONTROLS FOR BINDING, SCRAPING, EXCESSIVE LOOSENESS, WORN OR CHIPPED GEARS, MISALIGNMENT, POSITIVE ACTION. PAR. 42a (4)	
6	CHECK FOR NORMAL OPERATION. PAR. 42a (5)	
7	CLEAN AND TIGHTEN EXTERIOR OF COMPONENTS AND CASES, RACK MOUNTS, SHOCK MOUNTS, ANTENNA MOUNTS, COAXIAL TRANSMISSION LINES, WAVE GUIDES, AND CABLE CONNECTIONS. PAR. 42a(6)	
8	INSPECT CASES, MOUNTINGS, ANTENNAS, TOWERS, AND EXPOSED METAL SURFACES, FOR RUST, CORROSION, AND MOISTURE. PAR 42a (7)	
9	INSPECT CORD, CABLE, WIRE, AND SHOCK MOUNTS FOR CUTS, BREAKS, FRAYING, DETERIORATION, KINKS, AND STRAIN. PAR.42a(8)	
10	INSPECT ANTENNA FOR ECCENTRICITIES, CORROSION, LOOSE FIT, DAMAGED INSULATORS AND REFLECTORS. PAR. 42a (9)	
11	INSPECT CANVAS ITEMS, LEATHER, AND CABLING FOR MILDEW, TEARS, AND FRAYING. PAR. 42a (10)	
12	INSPECT FOR LOOSENESS OF ACCESSIBLE ITEMS: SWITCHES, KNOBS, JACKS, CONNECTORS, ELECTRICAL TRANSFORMERS, POWERSTATS, RELAYS, SELSYNS, MOTORS, BLOWERS, CAPACITORS, GENERATORS, AND PILOT LIGHT ASSEMBLIES. PAR. 42a(11)	
13	INSPECT STORAGE BATTERIES FOR DIRT, LOOSE TERMINALS, ELECTROLYTE LEVEL AND SPECIFIC GRAVITY, AND DAMAGED CASES.	
14	CLEAN AIR FILTERS, BRASS NAME PLATES, DIAL AND METER WINDOWS, JEWEL ASSEMBLIES. PAR. 42a (12)	
15	INSPECT METERS FOR DAMAGED GLASS AND CASES. PAR. 42a (13)	
16	INSPECT SHELTERS AND COVERS FOR ADEQUACY OF WEATHERPROOFING.	
17	CHECK ANTENNA GUY WIRES FOR LOOSENESS AND PROPER TENSION. PAR. 42a (14)	
18	CHECK TERMINAL BOX COVERS FOR CRACKS, LEAKS, DAMAGED GASKETS, DIRT AND GREASE.	
19	ELECTRON TUBES - INSPECT FOR LOOSE ENVELOPES, CAP CONNECTORS, CRACKED SOCKETS: INSUFFICIENT SOCKET SPRING TENSION; CLEAN DUST AND DIRT CAREFULLY; CHECK EMISSION OF RECEIVER TYPE TUBES. PAR. 42b(1)	
20	INSPECT FILM CUT-OUTS FOR LOOSE PARTS, DIRT, MISALIGNMENT AND CORROSION.	
21	INSPECT FIXED CAPACITORS FOR LEAKS, BULGES, AND DISCOLORATION. PAR. 42b (3)	
22	INSPECT RELAY AND CIRCUIT BREAKER ASSEMBLIES FOR LOOSE MOUNTINGS; BURNED, PITTED, CORRODED CONTACTS; MISALIGNMENT OF CONTACTS AND SPRINGS; INSUFFICIENT SPRING TENSION; BINDING OF PLUNGERS AND HINGE PARTS.	
23	INSPECT VARIABLE CAPACITORS FOR DIRT, MOISTURE, MISALIGNMENT OF PLATES, AND LOOSE MOUNTINGS. PAR. 42b(4)	
24	INSPECT RESISTORS, BUSHINGS, AND INSULATORS, FOR CRACKS, CHIPPING, BLISTERING, DISCOLORATION AND MOISTURE. PAR. 42b (5)	
25	INSPECT TERMINALS OF LARGE FIXED CAPACITORS AND RESISTORS FOR CORROSION, DIRT AND LOOSE CONTACTS. PAR 42b (6)	
26	CLEAN AND TIGHTEN SWITCHES, TERMINAL BLOCKS, BLOWERS, RELAY CASES, AND INTERIORS OF CHASSIS AND CABINETS NOT READILY ACCESSIBLE. PAR. 42b (7)	
27	INSPECT TERMINAL BLOCKS FOR LOOSE CONNECTIONS, CRACKS AND BREAKS. PAR. 42b (8)	
28	CHECK SETTINGS OF ADJUSTABLE RELAYS.	
29	LUBRICATE EQUIPMENT IN ACCORDANCE WITH APPLICABLE DEPARTMENT OF THE ARMY LUBRICATION ORDER.	
30	INSPECT GENERATORS, AMPLIDYNES, DYNAMOTORS, FOR BRUSH WEAR, SPRING TENSION, ARCING, AND FITTING OF COMMUTATOR.	
31	CLEAN AND TIGHTEN CONNECTIONS AND MOUNTINGS FOR TRANSFORMERS, CHOKES, POTENTIOMETERS, AND RHEOSTATS. PAR. 42b (9)	
32	INSPECT TRANSFORMERS, CHOKES, POTENTIOMETERS, AND RHEOSTATS FOR OVERHEATING AND OIL-LEAKAGE. PAR. 42b (10)	
33	BEFORE SHIPPING OR STORING - REMOVE BATTERIES.	
34	INSPECT CATHODE RAY TUBES FOR BURNT SCREEN SPOTS.	
35	INSPECT BATTERIES FOR SHORTS AND DEAD CELLS.	
36	INSPECT FOR LEAKING WATERPROOF GASKETS, WORN OR LOOSE PARTS. PAR. 42b(10)	
37	MOISTURE AND FUNGIPROOF. PAR. 42b (12)	
38	IF DEFICIENCIES NOTED ARE NOT CORRECTED DURING INSPECTION, INDICATE ACTION TAKEN FOR CORRECTION. PAR. 42b (13)	

DA AGO FORM 1 MAY 51 11-239 REPLACES DA AGO FORM 419, 1 DEC 50, WHICH IS OBSOLETE.

Figure 21. DA AGO Form 11–239.

(5) Check for normal operation (pars. 51 and 52).

Caution: Disconnect all power before performing the following operations. Upon completion, reconnect power and check for satisfactory operation.

(6) Clean and tighten the exterior of the components and receiver cabinet or rack mountings, as applicable.

(7) Inspect the receiver cabinet or rack mountings, antenna system, and exposed metal surfaces, as applicable, for rust, corrosion, and moisture.

(8) Inspect cords, cables, wires, and cabinet rubber mounts for cuts, breaks, fraying, deterioration, kinks, and strain.

(9) Inspect the antenna system for eccentricities, corrosion, loose fit, and damaged insulators (fig. 15).

(10) Inspect the cabling and technical manuals for tears, mildew, or fraying.

(11) Inspect knobs, dials, PHONES jack, pilot lamp assembly, brackets, pigtail leads of fuse F2, crystals Y7 and Y8, and all accessible items for looseness.

(12) Clean the MEGACYCLES dial and meter windows.

(13) Inspect the meter for damaged glass, case, and zero adjustment screw.

(14) Check the antenna system guy rope for looseness and proper tension in Radio Set SCR–244–D.

b. Interior.

(1) Inspect the electron tubes for loose envelopes, cracked sockets, and insufficient socket spring tension; remove the dust and dirt carefully; check the tubes.

(2) Inspect the seating of holder-type fuse F1 and of fuse F2 (when of this type), on the rear apron and that of all tubes, dial lamps, r-f tuner subassemblies, r-f coils, and connectors; also the seating of each crystal contained in the frequency control unit holder of Radio Receivers R–274A/FRR and R–274C/FRR.

(3) Inspect fixed capacitors C128, C129A, and B, C137, C144, C151, C158, C159, C160, C161 A, B, and C, and C163, as applicable, for leaks, bulges, and discoloration.

(4) Inspect the variable capacitors for dirt, moisture, misalinement of plates, and loose mountings. The Δ FREQ capacitor C65 of Radio Receivers R–274A/FRR and R–274C/FRR is not easily accessible (par. 90*c*).

(5) Inspect the resistors, bushings, and insulators, for cracks, chipping, blistering, discoloration, cleanliness, and moisture. The insulators comprise the four isolantite bases of switch S1A, B, C, and D and those of the 24 r-f tuner subassemblies; also the isolantite bushing on the r-f strip and the steatite feedthrough insulator on the frequency control unit of Radio Receivers R–274A/FRR and R–274C/FRR.

(6) Inspect the terminals of the metal-inclosed fixed capacitors and those of wire-wound resistor R85, and of resistors R72 and R73 when of this type, for corrosion, dirt, and loose contacts.

(7) Clean and tighten switches, terminal boards, interior of chassis, and receiver cabinet, not readily accessible. Do this for switches S4; S5A, B, and C; S6; S7; S8; S9; S10; and S11; also for S2 and S3 in Radio Receivers R–274A/FRR and R–274C/FRR. Do the same for S1A, B, C, and D but make sure to observe the pin action in the V contacts of the switch by removing all r-f tuner subassemblies except those on one band.

(8) Inspect terminal boards for loose connections, cracks, and breaks.

(9) Clean and tighten connections and mountings, such as those for transformers, chokes, and potentiometers.

(10) Inspect transformers T7 and T8 and chokes L51 and L52, for overheating and leakage. Check potentiometers R84 and R93, and R211 in Radio Receiver R–320A/FRC, for overheating.

(11) Inspect the wavy washer at the front end of the turret rotor assembly, helical spring at pointer slide, two helical springs at the lever and roller detent assembly, helical spring at the conversion switch, and the three spider springs (fig. 90); also inspect the mounting springs for the r-f tuner subassemblies and those that mount the r-f coils to each subassembly for wear, looseness, poor wiping contact,

corrosion, tension, and distortion, as applicable.

(12) Check the adequacy of the moisture-proofing and fungiproofing treatment (par. 46). If the r-f coil, r-f choke, or soldered joint coating is damaged, check for damage of the item or joint.

(13) If the deficiencies noted are not corrected during inspection, indicate what action was taken to correct them.

Section III. LUBRICATION AND WEATHERPROOFING

43. Lubrication

a. The parts lubricated by the manufacturer at the factory (par. 44) require no subsequent lubrication at prescribed intervals for normal use of the equipment. Any repairs made with regard to the replacement of lubricated parts within the scope of organizational maintenance do not alter this condition. Field maintenance requirements with regard to lubrication during overhaul are outlined in paragraph 91.

b. When it is evident that cleaning is indicated because of accumulations of sand, grit, and dirt, only recourse to overhaul provides for the satisfactory cleaning and subsequent lubrication of the gear-train mechanism. Any variable air capacitor may be removed from the equipment for cleaning; only the 4-gang capacitor, however, in some instances requires subsequent lubrication.

44. Parts Lubricated by Manufacturer

The following chart lists the parts of each radio receiver that have been lubricated by the manufacturer and do not require subsequent lubrication unless erratic or faulty operation is experienced.

Component	Part lubricated	Lubricant used	Reason subsequent lubrication is not required
Radio Receivers, all types.	Bearings of all variable air trimmer and crystal phasing capacitors.	Lubricating Grease (GB) (General Purpose Aircraft) (MIL–L–7711).	That provided is sufficient, even subsequent to cleaning in solvent.
	Bearings of the 4-gang variable air capacitor.	Lubricating Grease (GB) (General Purpose Aircraft) (MIL–L–7711).	That provided is sufficient for life of receiver until overhauled.
	Gear-train mechanism, front bearing hub, rear bearing machine screw, two ball bearings, five tempered shafts on base plate assembly; flywheel shaft and band change gear assembly shaft, at bearings of each.	(GL) Grease, Aircraft and Instruments (For low and high temperatures) (MIL–G–3278).	That provided is sufficient for life of receiver until overhauled.

45. Lubrication Under Unusual Conditions

a. Arctic Regions. Lubricants that are satisfactory at moderate temperatures stiffen and solidify at subzero temperatures; as a result, moving parts bind or become inoperative. The lubrication of the equipment, as received by organizational maintenance, is that specified for low-temperature operation when the equipment is intended for use in arctic regions, since the remote possibility that the lubrication is to be changed always requires the facilities of field maintenance.

b. Tropical Regions. High temperatures and moisture caused by rain, condensation, etc., may cause normally satisfactory lubricants to flow from moving parts and other surfaces. These bearing surfaces will wear excessively; also hinges, fasteners, and other parts will be damaged or destroyed by rust and corrosion. The lubrication of the equipment, as received by organizational maintenance, is that specified for high-temperature operation when the equipment is intended for use in tropical regions, since the remote possibility that the lubrication is to be changed always requires the facilities of field maintenance. Inspect the equipment daily and lubricate the gear-train mechanism as required to insure efficient operation, using the lubricants suitable for high temperatures.

c. Desert Regions. Dust and sand infiltration causes grit in the lubricants and will seriously

impair and damage its moving parts. Hot, dry temperatures cause the lubricants to flow from the moving parts, and conditions similar to those described in *b* above will result. Use lubricants suitable for high temperatures for the gear-train mechanism, and make sure to inspect and clean daily, if possible.

46. Weatherproofing

a. General. Signal Corps equipment, when operated under severe climatic conditions such as prevail in tropical, arctic, and desert regions, requires special treatment and maintenance. Fungus growth, insects, dust, corrosion, salt spray, excessive moisture, and extreme temperatures are harmful to most materials. R-f coils, r-f chokes, and each soldered joint of the radio receivers are coated with bakelite resin and fungicidal varnish.

b. Tropical Maintenance. A special moisture-proofing and fungiproofing treatment has been devised which, if properly applied, provides a reasonable degree of protection. This treatment is explained in TB SIG 13 and TB SIG 72.

c. Winter Maintenance. Special precautions necessary to prevent poor performance or total operational failure of equipment in extremely low temperatures are explained in TB SIG 66 and TB SIG 219.

d. Desert Maintenance. Special precautions necessary to prevent equipment failure in areas subject to extremely high temperatures, low humidity, and excessive sand and dust are explained in TB SIG 75.

47. Rustproofing and Painting

a. When the finish on the steel cabinet of the table-cabinet type of receiver has been badly scarred or damaged, rust and corrosion can be prevented by touching up bared surfaces. Use No. 000 sandpaper to clean the surface down to the bare metal; obtain a bright, smooth finish.

Caution: Do not use steel wool. Minute particles frequently enter the cabinet and cause harmful internal shorting or grounding of circuits.

b. When a touch-up job is necessary, apply paint with a small brush. Remove rust from the cabinet by cleaning corroded metal with solvent (SD). In severe cases, it may be necessary to use solvent (SD) to soften the rust and to use sandpaper to complete the preparation for painting. Paint used will be authorized and consistent with existing regulations.

Note.—The finish on the cabinet as provided by the manufacturer is phosphate rustproof treatment over which is applied a wrinkle finish steel gray, inside and outside. The aluminum front panel of the receiver first is given a caustic dip and then a baked gray enamel finish on front and edges. In rack mountings, the aluminum top cover and bottom plate are given a caustic dip satin finish.

Section IV. TROUBLESHOOTING AT ORGANIZATIONAL MAINTENANCE LEVEL

48. General

a. The troubleshooting and repair work that can be performed at the organizational maintenance level (operators and repairmen) are necessarily limited in scope by the tools, test equipment, and replaceable parts issued and by the existing tactical situation. Accordingly, troubleshooting is based on the performance of the equipment and the use of the senses in determining such troubles as burned-out tubes or cracked insulators.

b. Paragraphs 49 through 52 help in determining which of the components, such as the receiver or headset, are at fault and in localizing the fault in that component to the defective stage or item, such as a tube or fuse.

49. Visual Inspection

a. Failure of this equipment to operate properly usually will be caused by one or more of the following faults.

(1) Improper connection of the a-c power cord of the radio receiver to the a-c power source.
(2) Worn, broken, or disconnected cables, transmission line, or plugs.
(3) Burned-out fuses.
(4) Wires broken because of excessive vibration.
(5) Defective tubes.
(6) Inactive (dirty or cracked) crystals.
(7) Defective gear or tuning mechanism.
(8) Dirty or bent plates of variable capacitors.

b. When failure is encountered and the cause is not immediately apparent, check as many of these items as is practicable before starting a detailed examination of the component parts of the system. If possible, obtain information from the operator of the equipment regarding performance at the time trouble occurred.

c. Visually inspect the antenna system for obvious abnormalities.

50. System Sectionalization of Trouble to a Component

System sectionalization consists of determining whether the trouble is in the receiver, headset, antenna, extension cords, or a-c power source. The following procedures isolate the trouble to a particular component.

a. Operate the equipment and observe its performance. Refer to the equipment performance checklist (par. 52) for normal operating indications.

b. If the equipment is dead and the dial lamps do not light, the trouble is probably radio receiver fuse F1 in the primary of the power transformer. Check both fuses F1 and F2 at an early stage in trouble shooting. Do not continue to burn out fuses before looking elsewhere to determine the basic source of trouble.

Note.—Fuse F2 probably will blow if the radio receiver is turned on and off too frequently, because of the excessive initial filter capacitor charging current through it.

c. The headset of the equipment is checked most easily by replacement with a headset known to be functioning properly. This procedure applies to each of the cords.

d. Disconnect the radio receiver antenna lead-in cable at antenna input connector J1 and replace it with a short length of wire attached to a pin suited to be plugged in one of the terminals of connector J1. If the radio receiver then provides for the reception of a signal tuned in, the antenna system is the cause of the trouble.

e. If the radio receiver is not dead but exhibits unsatisfactory performance such as excessive noise, howling, or weak signals, replace it with a good receiver. If the trouble disappears, the replaced receiver is defective. If the trouble persists, the trouble is not in the receivers, but external to them.

f. Disconnect the radio receiver antenna as instructed in *d* above. If the symptoms persist, the trouble is in the installation and it may be ignition noise caused by the a-c power source. If removal of the antenna causes the symptoms to become less pronounced or to disappear entirely, the trouble is in the antenna.

51. Troubleshooting by Using Equipment Performance Checklist

a. General. The equipment performance checklist (par. 52) will help the operator to locate trouble in the equipment. The list gives the item to be checked, the conditions under which it is checked, the normal indications and tolerances of correct operation, and the corrective measures the operator can take. *To use this list, follow the items in numerical sequence.*

b. Action or Condition. For some items, the information given in the *Action or condition* column consists of various switch and control settings under which the item is to be checked. For other items it represents an action that must be taken to check the normal indication given in the *Normal indication* column.

c. Normal Indications. The normal indications listed include the visible and audible signs that the operator should perceive when he checks the items. If the indications are not normal, the operator should apply the recommended corrective measures.

d. Corrective Measures. The corrective measures listed are those the operator can make without turning in the equipment for repairs. A reference in the table to paragraph 80, 82, 86, 87, 88, or 95 indicates that the trouble cannot be corrected during operation and that troubleshooting by an experienced repairman is necessary. This is the case also if the equipment is completely inoperative or if the recommended corrective measures do not yield results. However, if the tactical situation requires that communication be maintained and if the equipment is not completely inoperative, the operator must maintain it in operation as long as it is possible to do so.

52. Equipment Performance Checklist

	Item No.	Item	Action or condition	Normal indications	Corrective measures
PREPARATORY	1	Antenna	*Lead-in* wire connected to antenna input connector.		
	2	Headset	Headset cord plug connected to extension cord, in turn plugged into PHONE jack on receiver.		
	3	Line cord	Line cord plug inserted into socket of a-c power source.		
	4	Audio output terminals	Loudspeaker or 600-ohm matching load connected to AUDIO OUTPUT terminals.		
	5	SEND-REC switch	Set at REC position.		
	6	TUNING LOCK	Unclamp.		
	7	XTAL PHASING	Set to diamond.		
	8	SELECTIVITY switch	Set at NON-XTAL 3 KC position.		
	9	AUDIO GAIN control	Set at 8.		
	10	MOD-CW switch	Set at MOD position.		
	11	AVC-MAN switch	Set at AVC position.		
	12	BEAT OSC. control	Set at 0 knob dial position.		
	13	LIMITER-OFF switch	Set at OFF position.		
	14	XTALS-VFO switch in (Radio Receivers R–274A/FRR and R–274C/FRR only).	Set at VFO position.		
	15	If GAIN control (in Radio Receiver R–320A/FRC only).	Set fully clockwise.		
	16	RF GAIN control	Set at knob dial OFF position.		
START	17	RF GAIN control	Turn clockwise from knob dial OFF position.	*Click* indicates receiver is *on*.	Check a-c line cord. Check FUSE F1 at rear apron of chassis.
				Dial lamps and tube filaments light.	Check dial lamps and tubes.
			Set fully clockwise	After about 1 minute rushing noise is heard in headset.	Refer to par. 80. Check headset and connection to receiver. Check FUSE F2 at T8 terminal 11, or at rear apron, as applicable. Check tubes.

52. Equipment Performance Checklist—Continued

	Item No.	Item	Action or condition	Normal indications	Corrective measures
EQUIPMENT PERFORMANCE	18	TUNING control	Leave BAND CHANGE control indented for band as indicated on dial visible at MEGACYCLES window. Tune across entire band by rotating TUNING control in either direction.	Signals or noise heard in headset. Meter M1 shows relative strength of signals.	If signals are received mormally, but meter does not indicate; replace tube V15. If signals are not obtained or if they are weak, check antenna systems; then check all other tubes in receiver. If meter shows indication but replace tubes V17. V16, and V14, in turn,
	19	BAND CHANGE control.	Indent each band in turn. Use procedure given in step 18 above.		
	20	RF GAIN control	Tune in any station by rotating the TUNING control. Rotate RF GAIN control counterclockwise to its a-c power switch *on* position and then back to its fully clockwise position.	Strength of signal increases clockwise and decreases counterclockwise. Control operation is not accompanied by grating mechanical noise.	Refer to par. 82.
	21	IF GAIN control (in Radio Receiver R–320A/FRC only).	Rotate IF GAIN control from maximum to minimum and then back to maximum.	Strength of signal decreases counterclockwise and increases clockwise. Control operation is not accompanied by grating mechanical noise.	Refer to par. 82.
	22	AUDIO GAIN control	Rotate control in either direction.	Strength of signal increases clockwise and decreases counterclockwise. Control operation is not accompanied by grating mechanical noise.	Refer to par. 82.
	23	SEND–REC switch	Set at SEND position. (When this check is completed, set at REC position.)	No sound is heard in phones.	Replace switch S9.
	24	AVC–MAN switch	Set at MAN position. (When this check is completed, set at AVC position.)	Strength of signal may or may not increase. Meter becomes inoperative.	Refer to par. 82.

52. Equipment Performance Checklist—Continued

	Item No.	Item	Action or condition	Normal indications	Corrective measures
EQUIPMENT PERFORMANCE	25	SELECTIVITY switch	Tune receiver to a modulated signal and then switch, in turn, from 3 KC position to 8 KC and to 13 KC NON-XTAL positions; then to .2 KC, .5 KC, and 1.3 KC XTAL positions.	Receiver noise output increases as receiver NON-XTAL bandwidth is increased, and higher audio-frequency response levels increase as XTAL bandwidth is increased. Tuning of receiver is sharper as bandwidth is decreased.	Refer to par. 95.
	26	LIMITER–OFF switch	Set at LIMITER position. (When this check is completed set at OFF position.)	Receiver audible noise output is attenuated.	Refer to par. 82.
	27	XTAL PHASING control.	(Note SELECTIVITY switch is at a XTAL position.) Turn XTAL PHASING control in either direction, as needed. (When this check is completed set SELECTIVITY switch at 3 KC position.)	Unwanted heterodyne signal is attenuated highly.	Refer to par. 87.
	28	MOD-CW switch	Set at CW position and tune in a c-w signal on one of the h-f bands. (Be sure that BEAT OSC. control is set at 0 knob dial position.)	Beat-frequency audio signal is zero-beat when receiver is tuned.	Replace tubes V12 and V13, in turn.
	29	BEAT OSC control	Obtain beat note tone output by rotating, in either direction, to some position on knob dial scale.	Change in pitch of audio tone is noted, the pitch increasing in either direction from 0 knob dial position.	Refer to par. 87.
	30	METER RF-AF spring return switch.	Then set AUDIO GAIN control fully counterclockwise. Hold spring return switch in its AF depressed position and slowly rotate AUDIO GAIN control clockwise, watching that meter indication is not off scale.	METER AF indication increases as AUDIO GAIN control is rotated clockwise.	Replace V15. Refer to par. 86.
	31	XTALS switch (in Radio Receivers R–274A/FRR and R–274C/FRR only).	Switch from VFO to switch position of crystal fitted holder. Set TUNING and BAND CHANGE controls for signal frequency to be tuned in. (Note AVC-MAN switch is at AVC position as required for meter M1 to provide an indication.)	Signal heard in headset	If signal cannot be tuned in replace tube V3 and/or crystal used. Refer to par. 88.

52. Equipment Performance Checklist—Continued

	Item No.	Item	Action or condition	Normal indications	Corrective measures
EQ. PERFORMANCE	31	XTALS switch (in Radio Receivers R–274A/FRR and R–274C/FRR only)—Con.	Set MOD–CW switch, as applicable to signal. Tune in signal using Δ FREQ and then TUNING control. Repeat for each crystal switch position, using same crystal or others, in turn.		
	32	Δ FREQ control (in Radio Receivers R–274A/FRR and R–274C/FRR only).	Same as for item 31	Varies frequency of crystal in frequency control unit holder selected, to accurately tune in signal, as evidenced by increase in meter M1 indication.	Refer to par. 88.
STOP	33	RF GAIN switch	Turn RF GAIN control fully counterclockwise, and set switch at OFF position.	Dial lamps go out. No noise or signals are heard in headset.	Replace switch S10.

CHAPTER 4
THEORY

53. Block Diagram
(fig. 22)

Radio Receivers R–483/FRR, R–483A/FRR, and R–320A/FRC are the general purpose superheterodyne type, each having a frequency range of .54 to 54.0 mc covered in six continuously variable tuning bands. Radio Receivers R–274A/FRR and R–274C/FRR have added provision for fixed-frequency, crystal-controlled reception within this range, but are used only from 1.35 to 29.7 mc. To maintain high image rejection ratios for signal frequencies above 7.4 mc, each receiver utilizes a system of double conversion on bands 4, 5, and 6. On bands 1, 2, and 3, the intermediate frequency used is 455 kc; on bands 4, 5, and 6 the signal is first converted to the 3,955-kc intermediate frequency and then to the 455-kc intermediate frequency. Figure 22 shows in block diagram from the signal path through each receiver both for single and double conversion. It also shows the distribution of the B+ rectifier d-c supply voltages, the arrangement providing for the switch control of each mode of operation of the receiver. When SEND-REC switch S9 is in the SEND position, VI and V2 are inoperative, thus *desensitizing* the receiver. In each of Radio Receivers R–483/FRR, R–320A/FRC, and R–274A/FRR, a relay (fig. 22) may be used to perform the switch function of S9. The frequency band indented by the BAND CHANGE switch determines whether switch S4 is in its single or double conversion position. When V7 is operative, as for single conversion, V6 and V8 are inoperative, the reverse being the case for double conversion. When MOD-CW switch S7 is in the CW position, V13 is operative; when it is in the MOD position, V13 is inoperative. Complete schematic diagrams are included for each receiver type (figs. 99 through 102). In Radio Receivers R–274A/FRR and R–274C/FRR, the VFO–XTALS 1–2–3–4–5–6 switch provides for continuously variable or fixed-frequency, crystal-controlled reception, depending on whether it is in its VFO or one of its six XTALS positions.

a. First R-F Amplifier. First r-f amplifier stage V1 derives signal input from the doublet antenna system (par. 23). The antenna coupling, provided each frequency band of the receiver, presents an input impedance match (95 ohms), for optimum coupling. This stage provides reasonable constancy of gain and the proper tracking of all signals tuned in. The signal resonant circuits associated with the stage provide part of the total preselection used to develop the high image rejection ratios of the receiver. The stage output is impressed on the control grid of second r-f amplifier stage V2.

b. Second R-F Amplifier. Second r-f amplifier stage V2 is similar to first r-f amplifier stage V1. It provides the signal tuned in with further preselection, constant amplification, and high signal-to-noise ratios. The stage output is fed to the signal grid of the first mixer stage V5.

c. Variable-Frequency Oscillator. Vfo (variable-frequency oscillator) V4 provides conversion oscillator output suited for frequency conversion (heterodyne detection) of the signal tuned in. In Radio Receivers R–274A/FRR and R–274C/FRR, V4 is made operative by switch S2 in the VFO position. The output is always higher in frequency than the signal tuned in. On bands 1, 2, and 3, the difference frequency is 455 kc, and on bands 4, 5, and 6 it is 3,955 kc. The vfo output is fed to first mixer stage V5.

d. H-F Crystal Oscillator. H-f crystal oscillator V3, forming part of Radio Receivers R–274A/FRR and R–274C/FRR, when made operative by switch S2 in the XTALS position, provides output at a frequency of oscillation suitable for frequency conversion (heterodyne detection) of the signal tuned in. On bands 1, 2, and 3, the oscillations are higher in frequency by 455 kc and on bands 4, 5, and 6, are higher by 3,955 kc, than the frequency of the signal received. The oscillator output is fed to first mixer stage V5.

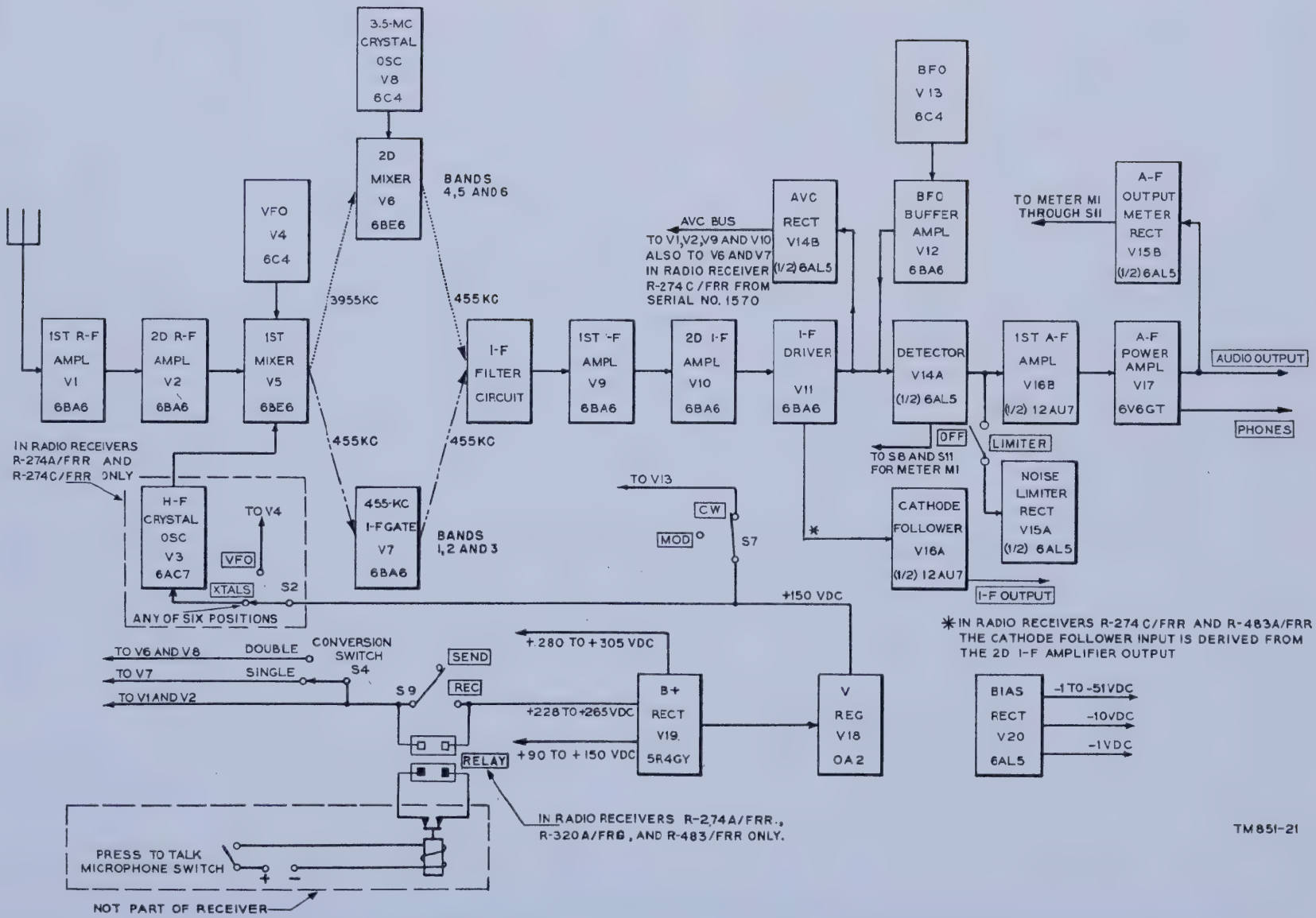

Figure 22. Radio receivers, all types, block diagram.

e. First Mixer. First mixer stage V5 derives signal input from V2 and the vfo input from V4 or V3 as applicable. It acts to heterodyne-detect the two signals to the difference frequency. For single conversion, the stage 455-kc i-f signal output is fed to 455-kc i-f gate V7. For double conversion, the stage 3,955-kc i-f signal output is fed to second mixer stage V6.

f. 455-kc I-F Gate. The 455-kc i-f gate V7 is made operative by switch S4 for single conversion. The stage provides the 455-kc single conversion signal at the proper voltage level to the input of the i-f filter circuit of first i-f amplifier stage V9.

g. 3.5-mc Crystal Oscillator. The 3.5-mc crystal oscillator V8 is made operative by switch S4 for double conversion when BAND CHANGE switch S1 is indented for band 4, 5, or 6. To provide for the conversion to 455 kc of the 3,955-kc signal input to V6, the output from the 3.5 mc oscillator is coupled directly to second mixer stage V6.

h. Second Mixer. Second mixer stage V6 is made operative by switch S4 which assumes its double conversion position when the BAND CHANGE switch S1 is indented for band 4, 5, or 6. It derives 3.955-mc signal input from V5 and 3.5-mc crystal oscillator input from V8. It acts to heterodyne-detect the two signals to 455 kc, and this i-f signal is fed to the i-f filter circuit.

i. I-F Filter Circuit. The i-f filter circuit derives signal input at 455 kc from V7 or V6, operative for single and double conversion. It comprises selective circuitry resonant to 455 kc. The three XTAL positions of S5 provide for crystal (455-kc) selectivity of the i-f filter circuit. The NON-XTAL selectivity provided is that due to the tuned circuitry alone. The output from the i-f filter circuit provides the 455-kc signal as input to first i-f amplifier stage V9.

j. First I-F Amplifier. First i-f amplifier stage V9 derives 455-kc signal input from the i-f filter circuit. The signal gain of the stage for each degree of selectivity accounts for almost half the overall gain of the receiver. The stage output at 455 kc is fed to second i-f amplifier stage V10.

k. Second I-F Amplifier. Second i-f amplifier stage V10 is identical with first i-f amplifier stage V9. As such, it duplicates the gain and the selectivity provided by V9. V9 and V10 thus provide almost all of the overall gain of the receiver. The stage provides the 455-kc signal it derives from V9, as input to i-f driver stage V11 and also to cathode follower V16A in Radio Receivers R–483A/FRR and R–274C/FRR.

l. I-F Driver. I-f driver stage V11 provides the 455-kc signal it derives from second i-f amplifier V10 at a level sufficient to drive detector V14A and avc rectifier V14B; also cathode follower V16A in Radio Receivers R–483/FRR, R–274A/FRR, and R–320A/FRC. It is used primarily, however, to isolate the loading due to V14A and V14B from second i-f amplifier V10, so that V10 can develop the circuit selectivities required.

m. Beat-Frequency Oscillator. Bfo V13 is made operative when MOD–CW switch S7 is in the CW position. Then the bfo provides oscillations for detector use to make audible keyed c-w or frequency-shift signals received. The oscillations are at a frequency of 455 kc, ±3 kc, depending on the setting of the BEAT OSC. control. The oscillations are fed to the input grid of bfo buffer-amplifier stage V12.

n. Bfo Buffer Amplifier. Bfo buffer-amplifier stage V12 amplifies the bfo output fed to it from bfo V13. The stage BFO INJ control provides for adjusting the stage output level fed to the detector (V14A) and avc rectifier (V14B), and to cathode-follower stage V16A in Radio Receivers R–483/FRR, R–320A/FRC, and R–274A/FRR. However, for normal use it is set for maximum output.

o. Detector. Detector V14A derives input at 455 kc from i-f driver stage V11. Its rectifying process provides for unidirectional output which varies in amplitude at the signal intelligence rate. The audio variations of the unidirectional output provide for input to first (a-f) amplifier stage V16B, the d-c output itself providing a negative bias for noise limiter rectifier V15A. The level of the d-c output, being proportional to the signal received, also is used to provide for a signal level indication on meter M1, when the AVC-MAN switch (S8) is in the AVC position. When the detector input is derived both from i-f driver V11 and bfo buffer-amplifier V12 as for keyed c-w and frequency-shift reception, the audio variation is single-tone output for the former and two-tone output for the latter. The pitch of the tone in the former instance depends on the setting of the BEAT OSC. control and in the latter instance, both on the BEAT OCS. setting used and on the carrier shift. When the detector input is due to unavoidable pulse-type noise, such as that caused by ignition systems, the audio variations are at the audible rate of the interference.

p. Cathode Follower. Cathode follower V16A is the 455-kc i-f output stage of the receiver. It

provides desired low-impedance, 70-ohm coaxial cable interconnection with other station equipment. The 455-kc i-f signal input to the stage is derived from i-f driver stage V11 in Radio Receivers R–483/FRR, R–274A/FRR, and R–320A/FRC, but from second i-f amplifier V10 in Radio Receivers R–483A/FRR and R–274C/FRR.

q. Avc Rectifier. Avc rectifier V14B is provided with 455 kc signal input from i-f driver stage V11. It comprises a delay bias avc system which functions to maintain the receiver audio output reasonably constant for received signals at input levels to V14B which exceed the delay bias used. When AVC-MAN switch S8 is in the AVC position, the avc bus provides the negative bias developed by V14B to V1, V2, V9, and V10 to reduce their gain in relation to the strength of the signal received. In Radio Receiver R–274C/FRR, from serial No. 1570, the avc bus provides the negative bias also to 455-kc i-f gate V7 and to second mixer V6; the avc bias applied to V1 and V2 is taken from a screw terminal connection. Two screw terminals are provided, one for normal use and one for the direction finder use of the receiver.

r. Noise Limiter Rectifier. Noise limiter rectifier V15A operates to bypass noise, such as that caused by ignition systems, from the audio system of the receiver, when LIMITER-OFF switch S6 is in the LIMITER position. The desired audio signal is bypassed with the noise for the interval of each noise spike. V15A derives negative bias and noise input, if any, from the V14A detector. The negative bias maintains V15A in a nonconducting state until the level of the noise input to it is sufficient to cause it to conduct. When V15A conducts, it provides for its noise limiter function.

s. First A-F Amplifier. First a-f amplifier V16B derives signal input from the V14A detector. It is the driver stage for a-f power amplifier V17 and provides the a-f signal at a voltage level sufficient for V17 to develop the a-f output of the receiver.

t. A-F Power Amplifier. A-f power amplier V17 derives a-f signal input from first a-f amplifier stage V16B. It develops a-f signal output in a 600-ohm matching load or loudspeaker and in an 8,000-ohm headset, when connected to the receiver.

u. A-F Output Meter Rectifier. A-f output meter rectifier V15B provides for meter M1 to indicate the receiver AUDIO OUTPUT power to a 600-ohm load when METER RF-AF switch S11 is held depressed in the AF position. In the normal METER RF position of S11, V15B is inoperative.

v. Power Supply. The self-contained power supply comprises the B+ rectifier, the bias rectifier, and the a-c (alternating-current) filament supply.

(1) *B+ rectifier.* The B+ rectifier comprises full-wave rectifier V19 and voltage regulator V18. V18 stabilizes the +150-volt d-c supply voltage of the B+ rectifier. The RF GAIN control setting chosen accounts for the +228 to +265, and the +280 to +305 d-c voltage range of the unregulated d-c supply voltages of the B+ rectifier; also for that of the +90 to +150 d-c supply voltage used in Radio Receiver R–274C/FRR from serial No. 487. The B+ rectifier provides the B+ supply voltage requirements of the receiver.

(2) *Bias rectifier.* The bias rectifier comprises full-wave rectifier V20. It provides −1 volt and −10 volts d-c bias voltages and a continuous bias voltage range within the limits of −1 to −51 d-c volts, depending on the setting of the RF GAIN control. In Radio Receivers R–483A/FRR and R–274C/FRR, there is a −7.8 volts d-c supply. The bias rectifier provides the fixed bias supply voltages requirements of the receiver.

(3) *A-c filament supply.* The a-c filament supply comprises four a-c filament windings rates at 5, 6.3, and 7.5 (two windings) volts ac. The a-c filament supply provides the a-c filament and pilot lamp power requirements of the receiver.

54. First R-F Amplifier Stage V1

(figs. 23, 24, and 25)

a. First r-f amplifier stage V1 functions similarly for each band selected by BAND CHANGE switch S1. For band 1 (.54 to 1.35 mc), switch S1 sections A and B, respectively, associate r-f tuner subassemblies L1 and L8 with the stage. The doublet antenna system lead-in wire is connected to antenna socket connector J1 through antenna adapter connectors P2 and P3. (When a simple single-wire antenna is connected through P2 and P3 to one terminal of J1, the other terminal of J1 is provided with a short lead grounded to the receiver chassis.) Trimmer capacitors C2

and C26 enable alinement to the proper point on the h-f end of the .54– to 1.35-mc frequency range of the calibrated main tuning dial. At the l-f (low-frequency) end, alinement is accomplished by inductance-trimming—that is, by adjusting the adjustable iron cores of L1 and of L8, through use of adjusting screw protruding from the coil form of each. Low-impedance coupling capacitor C27, by being common to the primary and secondary of L8, provides for low-impedance capacitive coupling in conjunction with the mutual coupling existent between the windings of L8. Resistor R7 acts to broaden the self-resonance of the primary of L8 so that in conjunction with the complex coupling of L8 it provides for uniform stage gain, regardless of the frequency of the signal tuned in on the band. With the signal tuned in, through use of the TUNING control, first and second dual-sections C1A, C1B, and C1C, C1D of the ganged four dual-section main TUNING capacitor, resonate L1 and L8, respectively, to the extent necessary for proper tracking of the stage.

b. Screen voltage is applied (from terminal 4 on terminal board E13) through a decoupling circuit (resistor R4 and capacitors C21 and C23) and the screen decoupling circuit (screen voltage-dropping resistors R3 and screen r-f bypass capacitor C20) (fig. 23). Plate voltage is applied (from terminal 4 of E13) through a decoupling circuit (resistor R6 and capacitors C22 and C23), resistor R5, and r-f choke L7. Capacitor C163 provides added supply line decoupling action in Radio Receivers R–483A/FRR and R–274C/FRR to serial No. 486. Separate screen voltage supply is provided V1 (from the junction of resistors R72 and R73) (fig. 24). Note that R3 now is 3,300 ohms. The plate voltage supply to V1 is outlined in figure 23, but decoupling capacitor C165 has been added, and C23 no longer provides for plate decoupling action. In figure 25, the screen and plate voltages are applied as outlined in figure 23 with C163 included. Capacitor C24 blocks the plate voltage from the tuned-plate circuit. Bias voltage is applied to the grid through AVC-MAN switch S8 and resistors R2 and R1. When S8 is in the MAN position, negative d-c voltage from the movable arm of RF GAIN control R93 is impressed directly to S8. When S8 is in the AVC position, this is still the case but resistor R97 is connected between S8 an R93. Resistor R94 provides a negative bias of 1 volt to the grid when R93 is set fully clockwise, usually when S8 is at AVC. Also, the avc negative bias developed by the avc rectifier is applied fully to the grid through S8, R2, and R1 (figs. 23 and 24), but particularly so in figure 25, since resistors R48, R115, and R116 act as a voltage divider from the avc bus to the —1-volt d-c bias supply. The screw terminal tap junction between R48 and R115 is that normally used; the terminal between R115 and R116 is used for the direction finder use of the receiver. Capacitor C18 blocks the bias voltage from the tuned-grid circuit. Capacitors C19 and C41 and resistor R2 act as a filter in the avc line and have some effect on the time constant of the avc circuit. R97 isolates the avc bias to the grid circuit. In figure 25, when S8 is at AVC and R93 is set elsewhere than at the maximum clockwise position, the actual negative bias effective at the grid is a complex resultant of the avc bias developed and the bias caused by the setting of R93.

c. Signal voltage across L1 is coupled through capacitor C18 to the control grid of the 6BA6 tube used in the stage. The amplified signal output of the stage appears across C1D. R1 isolates signal input voltages to the control grid and L7 and R5 isolate signal output voltages to the tuned circuit. R5 provides for the isolating impedance presented by L7 and R5 to be more uniform throughout the band than that of L7 alone.

d. Low time constant resistor R103 provides for C27 to discharge through it when SEND-REC switch S9 is switched from SEND to REC. L1 requires tracking capacitor C3 to compensate for the use of C27, so that L1 tracks properly with L8, since each provides for the band coverage through use of identical dual sections (C1A and C1B, and C1C and C1D) of main TUNING capacitor C1.

e. The r-f tuner subassemblies (figs. 97 through 102) for bands 1, 2, 3, and 4 are similar, except for the electrical values of the frequency determining elements which they comprise (figs. 97, 98, or 99 and 100, 101, or 102). Also L10 on band 3 and L11 on band 4 further incorporate padder capacitors C30 and C33, in parallel with C1C and C1D. C30 and C33 are tracking requirements on their respective bands. L5 of band 5 and L6 of band 6 are similar to L1 of band 1. Note, however, that the C1B section of the main tuning capacitor is not used. L12 of band 5 and L13 of band 6 are of different design to their counterparts used on bands 1, 2, 3, and 4. L12 and L13 provide for high-impedance capacitive coupling, apart from mutual coupling, by the manner in which the primary and secondary windings of each are

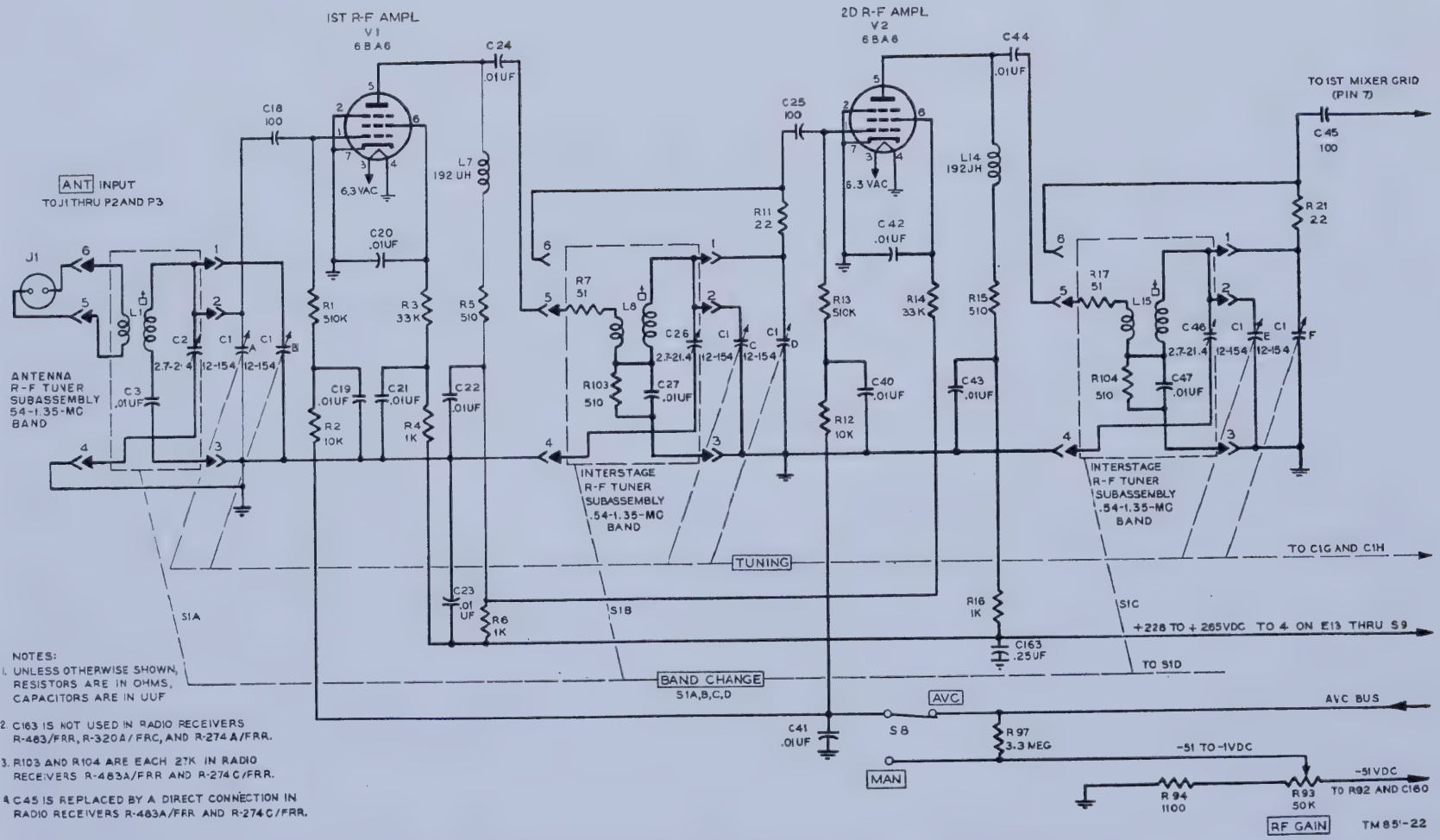

Figure 23. Radio receiver, all types, other than R–274C/FRR from serial No. 487, schematic diagram of two-stage r-f amplifier shown for band 1.

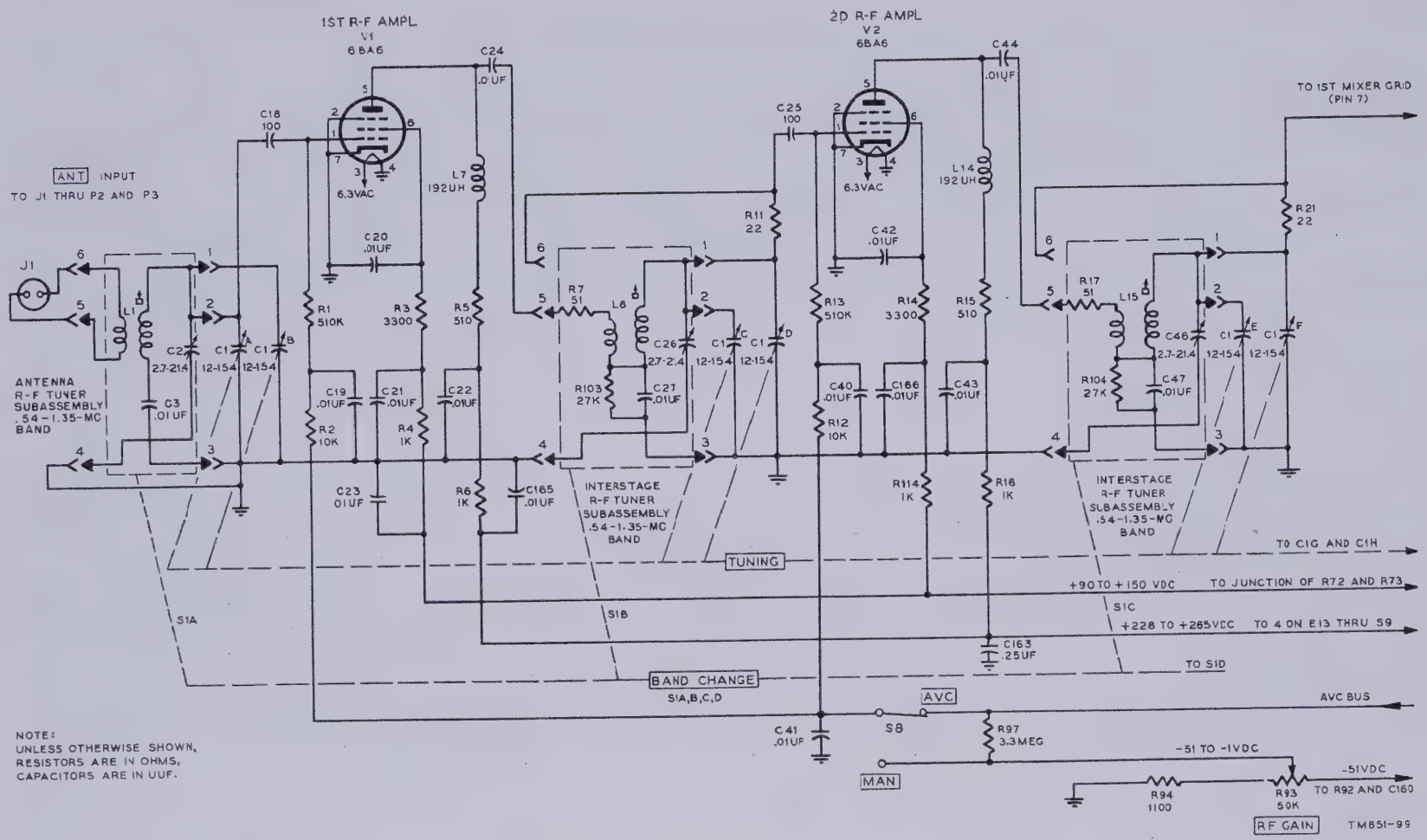

Figure 24. Radio Receiver R-274C/FRR, from serial No. 487 through 1569, schematic diagram of two-stage r-f amplifier shown for band 1.

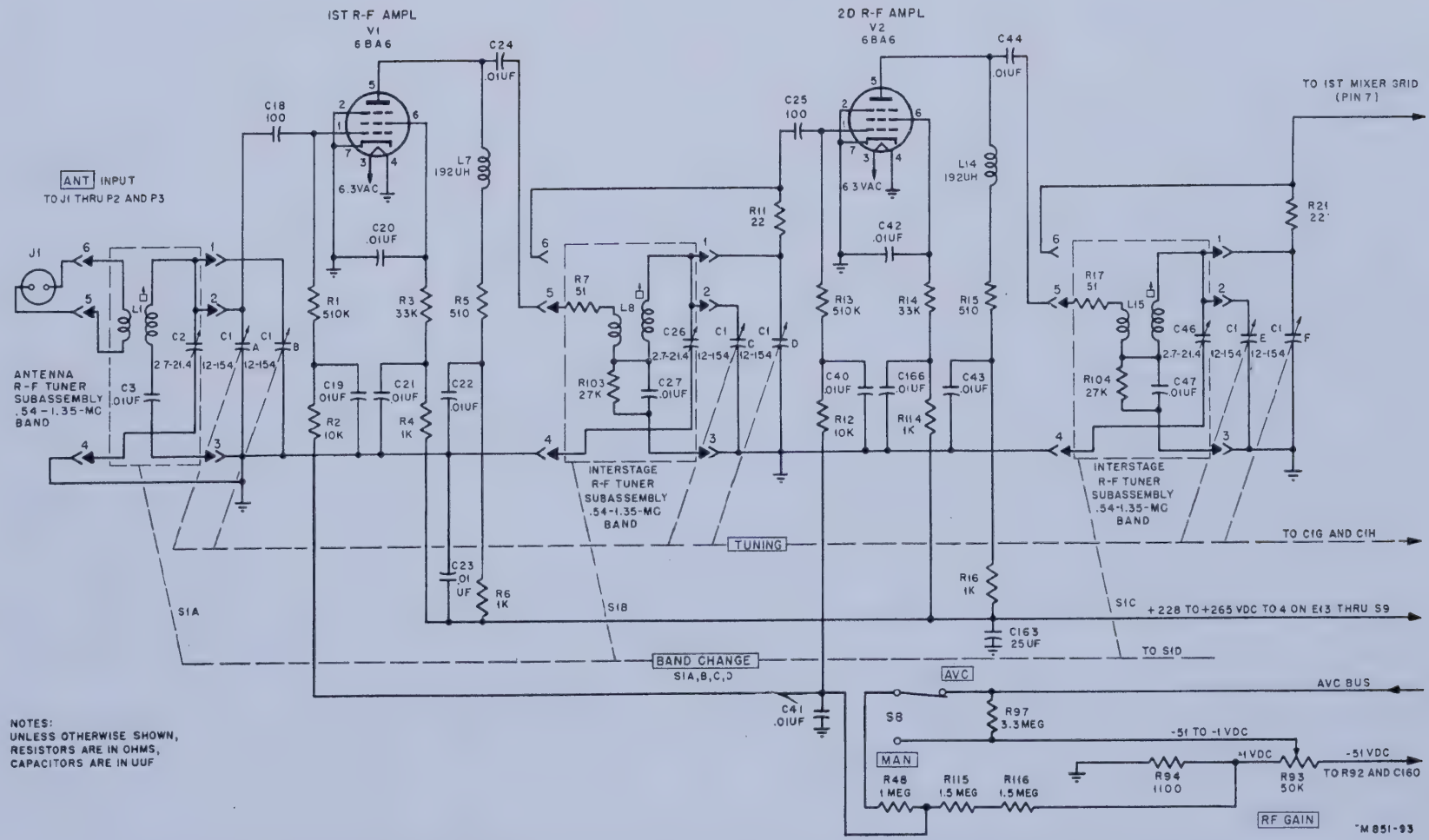

Figure 25. Radio Receiver R-274C/FRR, from serial No. 1570, schematic diagram of two-stage r-f amplifier shown for band 1.

interwound. For L12 and L13, the C1C and C1D sections of the main TUNING capacitor are connected in series. On band 5, padder capacitor C37 parallels C1D and trimmer capacitor C36 parallels C1C; on band 6 these capacitors are C39 and C38. C1C and C1D are connected in series so that the L to C ratio of the tuned circuits used on bands 5 and 6 is high enough to provide for the added preselection required at the higher signal frequencies. The higher capacitive reactance resultant requires that the stage output voltage developed be tapped down, that used being the voltage across C1D.

55. Second R-F Amplifier Stage V2

(figs. 23, 24, and 25)

a. Second r-f amplifier stage V2 functions similarly for each band selected by BAND CHANGE switch S1. The section of S1, when indented for band 1, provides for r-f tuner subassembly L15 to become a part of the stage. With the signal tuned in, the third dual section (C1E and C1F) of the ganged tuning capacitor provides for the resonance of L15, to the extent of the stage tracking. L15 is identical with L8, as are S1C to S1B. On band 1, trimmer capacitor C46 provides for the proper h-f alinement and the adjustable iron core of L15 provides for the proper l-f alinement. Capacitor C47 provides for low-impedance capacitive coupling and also for the proper tracking of L15 with L8. Resistor R17 broadens the self-resonance of the primary of L15.

b. In figure 23, screen voltage is applied (from terminal 4 on terminal board E13) through a decoupling circuit (resistor R6 and capacitors C22 and C23), and the screen decoupling circuit (screen voltage-dropping resistor R14 and screen r-f bypass capacitor C42). Plate voltage is applied (from terminal 4 of E13) through a decoupling circuit (resistor R16 and capacitor C23 and C43), resistor R15, and r-f choke L14. Separate screen voltage supply is provided V2 (from the junction of resistors R72 and R73) (fig. 24). Note that R14 now is 3,300 ohms. The plate voltage supply to V2 is outlined in figure 23, but C165 has been added, and C23 no longer provides for plate circuit decoupling action. In figure 25, the screen and plate supply voltages are applied as outlined in figure 23, with C163 included; also resistor R114 and capacitor C166 are used to provide for further screen circuit decoupling action. Resistor R6 is no longer in the screen voltage supply to V2. Capacitor C44 blocks the plate voltage from the tuned-plate circuit. Bias voltage is shunt-fed to the grid through AVC-MAN switch S8, and resistors R12 and R13; the avc negative bias and bias rectifier voltages impressed on the grid are the same as those outlined for V1 (par. 54*b*). Capacitor C25 blocks the bias voltage from the tuned-grid circuit. Capacitors C40 and C41 and resistor R12 act as a filter in the avc line and have some effect on the time constant of the avc circuit.

c. Signal voltage across L8 is coupled through resistor R11 and capacitor C25 to the control grid of the 6BA6 tube used in the stage. The amplified signal output of the stage appears across C1F. It is coupled through resistor R21 and capacitor C45 (fig. 23) to first mixer V5, but C45 is not used in figures 24 and 25. R13 isolates signal input voltages to the control grid and L14 and R15 isolate signal output voltages to the tuned circuit. R15 provides for the blocking impedance presented by L14 and R15 to be more uniform throughout the band than that of L14 alone. Grid suppressor resistor R11 provides against the spurious oscillation of the stage.

d. As outlined for their counterparts (par. 54), low time constant resistor R104 provides for the discharge of low-impedance coupling capacitor C47 when S9 is switched to REC. Also, the use of C47 provides for L15 to track properly with L8.

e. The interstage r-f tuner subassemblies (figs. 97 through 102), such as L8 and L15 for band 1, are identical for each frequency band—that is, L9, L16; L10, L17; L11, L18; L12, L19; and L13, L20. As such, the band circuit differences outlined in paragraph 54*e* are applicable similarly to second r-f amplifier stage V2.

56. Variable-Frequency Oscillator V4

(fig. 26)

a. Vfo V4 functions as a tuned-grid oscillator or as a Colpitts oscillator depending on whether the receiver is switched for single or double conversion. In Radio Receivers R–274A/FRR and R–274C/FRR, it is operative when S2 is in the VFO position. For band 1, the S1D section of BAND CHANGE switch S1 provides for the L25 r-f tuner subassembly to become part of the vfo. Temperature compensating capacitors C79 and C80, in parallel with TUNING capacitor C1G and C1H, assure that the vfo frequency stability is good enough for the receiver to provide for the i-f crystal selective reception of c-w signals.

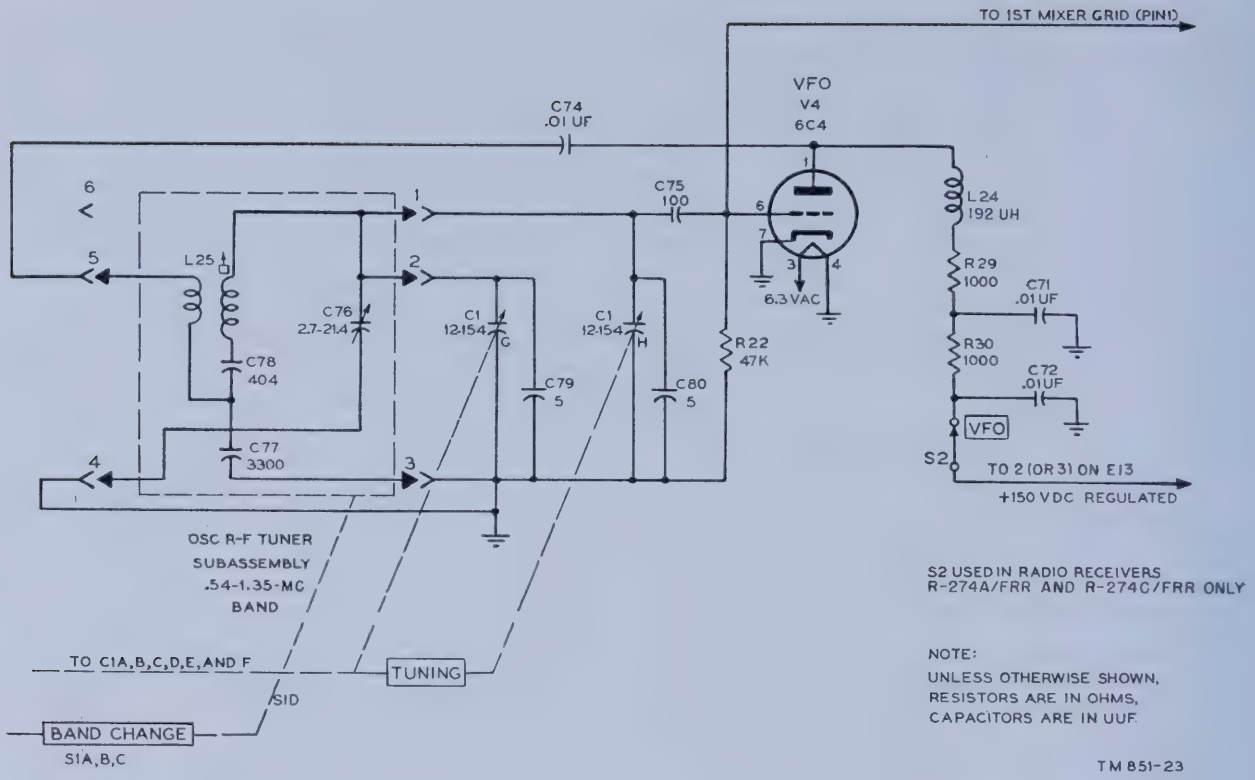

Figure 26. Radio receiver, all types, schematic diagram of variable-frequency oscillator.

On band 1, trimmer capacitor C76 provides for the proper h-f alinement and the adjustable iron core of L25 provides for the proper l-f alinement. The oscillator tracking capacitor is C78 but the oscillator tracking also depends on low-impedance coupling capacitor C77. The fourth dual-section capacitor, C1G and C1H, of the ganged main TUNING capacitor, provide for the oscillations of the resonance tuned-grid circuit of V4 to be 455 kc higher in frequency than the signal frequency tuned in.

b. Regulated B+ voltage is shunt-fed to the plate (from terminal 2 on terminal board E13) through S2 (par. 53*d*), the decoupling circuit (resistor R30 and capacitors C72 and C71), resistor R29, and r-f choke L24. R29 provides for the blocking impedance presented by L24 and R29 to be more uniform over the oscillator range than that of L24 alone. Grid-leak bias, provided by combination of resistor R22 and capacitor C75, is used so that the correct self-starting conditions for the oscillations of the vfo are always present.

c. The oscillations developed by the vfo closely approximate the resonant frequency of the tuned-grid circuit. The application of regulated B+ voltage to the plate of the 6C4 tube used causes a disturbance in the tube grid circuit such that grid current starts to flow. This grid current has a d-c component which flows through R22 to self-bias the tube and an a-c component which flows through C75 and the tuned circuit. The a-c component of the grid current causes the tuned-grid circuit to provide resonant output to the grid through C75 at the frequency of the tuned-circuit oscillations. Tube 6C4, having amplifying properties, provides for the oscillations developed at its plate to be 180° out of phase with those at the grid so that when they are fed back to the grid circuit through C74 and L25 their phase is correct to sustain the grid oscillations developed. As the tube self-bias is developed, grid and plate current flow only at the crest of each cycle of the tuned-circuit oscillations. The tube condition for sustaining the oscillations is such that the tuned-grid circuit is provided with sufficient feedback power to equal the tuned-circuit resistance losses and the tuned-circuit power drain caused by the grid leak and the grid dissipation. The oscillations developed at the plate are fed back to the grid by way of feedback capacitor C74, the complex low-impedance coupling of L25, and grid capacitor C75. The complex coupling used com-

prises mutual coupling caused by the windings of r-f coil L25 and low-impedance capacitive coupling caused by C77. The complex coupling used tends to maintain the output level of the vfo constant when tuned over the frequency range of band 1. The vfo output is taken from the grid of V4 and fed to first mixer stage V5.

d. R-f tuner subassemblies (figs. 97 through 102) L26 and L27, used on bands 2 and 3, respectively, are similar to L25 except for the electrical values of the frequency determining elements each comprises. L26 on band 2 does not use a low-impedance coupling capacitor. Also, L27 on band 3 further incorporates padder capacitor C83, in parallel with C1G. R-f tuner subassemblies L28, L29, and L30, used on bands 4, 5, and 6, respectively, are similar to each other, but differ from those used on bands 1, 2, and 3. The difference is that the vfo tuned circuit of each is a Colpitts type and common to both the plate and grid circuits of V4, instead of being confined to the grid circuit. For band 4, r-f coil L28, in series with two parallel oscillator tracking capacitors C88 and C89, and shunted by C1G and C1H in series, comprise the tuned circuit, apart from trimmer capacitor C86 which parallels C1G, and the padder capacitor C87 which parallels C1H. The grounded junction of C1G and C1H provides for the tuned circuit to be common to the plate and grid circuits of V4 so that the tuned-circuit oscillations can be fed to the grid and also in order that the oscillations at the plate are coupled to the tuned circuit in additive phase to sustain them. On bands 4, 5, 6, the vfo oscillations are always 3,955 kc higher in frequency than the signal tuned in. The Colpitts circuit is used to meet the need of a better oscillator at the higher frequencies developed.

57. H-F Crystal Oscillator V3

(fig. 27)

a. H-f crystal oscillator V3, in Radio Receivers R–274A/FRR and R–274C/FRR, functions as a fixed-frequency crystal oscillator for bands 2 through 5 of the receiver. For band 2, the S1D section of BAND CHANGE switch S1 provides for the L26 r-f tuner subassembly to become part of the h-f crystal oscillator. Here, the function of L26 is to amplify the r-f energy from V3 and to provide oscillator output coupling to first mixer stage V5. As explained below, in other bands, the oscillator transformers are tuned to amplify at

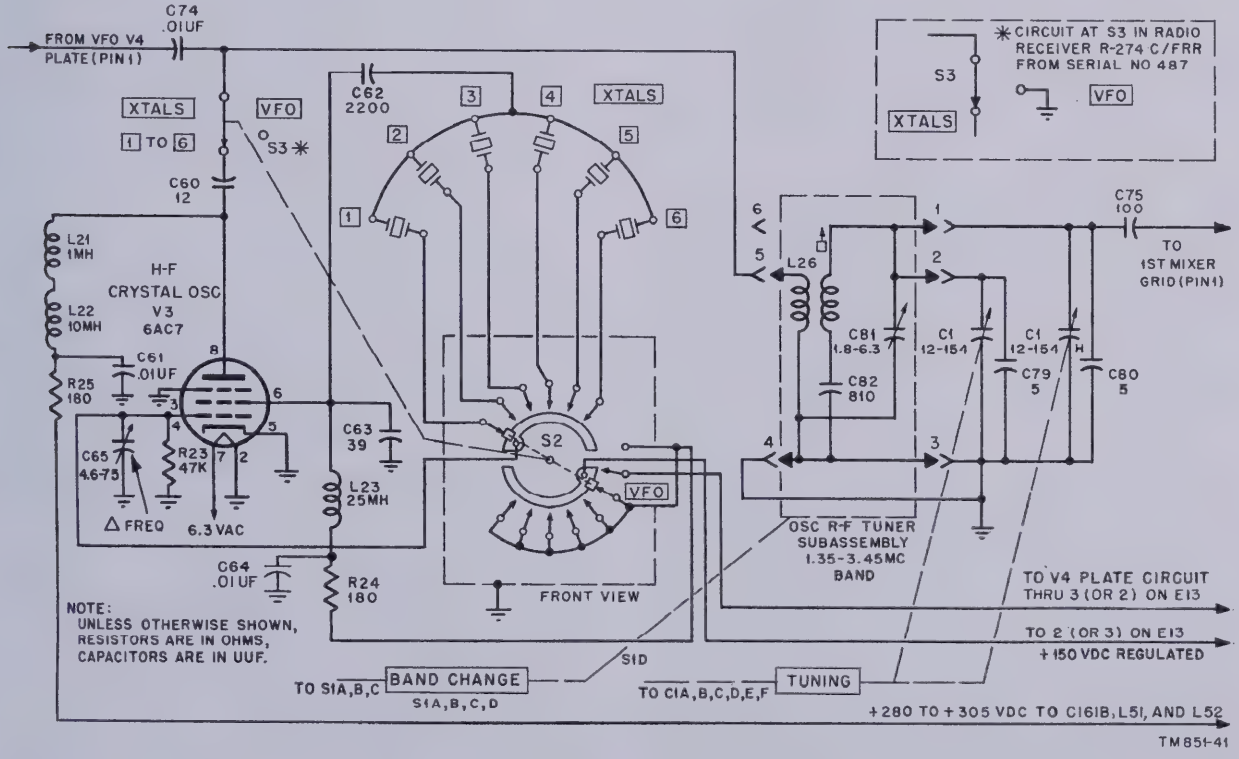

Figure 27. Radio Receivers R–274A/FRR and R 274C/FRR, schematic diagram of h-f crystal oscillator shown for band 2 (1.35 to 3.45 mc).

crystal harmonic frequencies. The h-f crystal oscillator comprises a shielded frequency control unit which has a tube socket and six crystal sockets on its top face. Any of the six crystal sockets may be fitted with a crystal whose frequency of oscillation is suited to any signal frequency from 1.35 to 29.7 mc. The crystal sockets are numbered 1, 2, 3, 4, 5, and 6, corresponding to the switch positions of the XTALS switch (S2, S3). S2 is contained in the frequency control unit and is of the dual-section type. S3 is separately mounted on the gear-train base-plate assembly of the receiver. The XTALS switch knob on the front panel actuates S2 directly and actuates S3 through a lever and eccentric arrangement. When the XTALS switch is in any one of its six positions, one section of S2 associates the corresponding crystal socket and crystal with the oscillator. The other section of S2 provides for regulated B+ supply voltage to be fed to the oscillator. Also, S3 provides for the oscillator output connection to L26.

b. Screen voltage is applied (from terminal 2 of terminal board E13) through S2 in the XTALS position, the decoupling circuit (resistor R24 and capacitors C64 and C73), and r-f choke L23. Plate voltage is applied (from the junction of C161B, L51, and L52 to terminal board E7 in the frequency control unit) through the filter network (resistor R25, capacitor C61, and two r-f chokes L22 and L21). Self-bias is provided by grid-leak resistor R23.

c. The h-f crystal oscillator uses an electron-coupled Pierce-type circuit. The Pierce oscillator is the equivalent of the Colpitts-type oscillator. Figure 27 shows that the oscillatory circuit elements of V3 are the screen grid, control grid, and cathode forming a triode oscillator with the screen grid acting as a plate. The oscillations developed at the plate element (screen grid) of V3 are coupled back to the grid circuit through the grid to oscillator plate capacitance in parallel with the capacitance of the crystal holder and C62. Coupling to the plate of V3 is through the electron stream with the suppressor acting to prevent secondary emission from the plate. Harmonic output is possible because the plate current is in the form of pulses of high harmonic content. The oscillations developed at the plate are coupled through capacitor C60 and the closed position of S3 to the primary of L26. Output load impedances L26 through L29 may be tuned to the fundamental or up to the third harmonic frequency of any crystal unit used. The complex coupling of L26 provides for the oscillations to be coupled through capacitor C75 to first mixer stage V5. L21 and L22 are self-resonant separately at high and low r-f frequencies and maintain high oscillator output to the plate load circuit of V3 through C60 by presenting a high impedance in the appropriate frequency range. In the circuit under discussion, part of the tuning capacitor is replaced by Δ FREQ capacitor C65 in series with C63, their junction being at the cathode. Since C65 is variable, it provides for a slight adjustment in the frequency of the oscillations. This is so since the effective capacity in shunt with the crystal can be considered as forming part of the equivalent resonant circuit of the crystal, comprising the frequency determining elements of the oscillator. The TUNING control signal resonance position of the four-gang eight-section tuning capacitor is chosen to provide for further resonating the tuned circuitry in r-f amplifiers V1 and V2.

d. On bands 2 and 3, r-f tuner subassemblies L26 and L27, respectively (fig. 99) are associated with the h-f crystal oscillator. L26 and L27 are similar to L25 (par. 56*d*), and L27 functions as described for L26 (par. 57*a*). On bands 4 and 5, r-f tuner subassemblies L28 and L29 (fig. 97) are associated with the h-f crystal oscillator. As for L26, each, on its respective band, provides for coupling the h-f crystal oscillator output to first mixer V5. Here the coupling through L28 and L29 is direct; no mutual inductance is provided by r-f coils L28 and L29.

e. On bands 2 and 3 (fig. 99), the frequency of oscillation of any crystal used is always the signal frequency for which it is intended plus 455 kc. On bands 4 and 5, the frequency of oscillation is the signal frequency plus 3,955 kc. Since the crystals have a tolerance of .005 percent of frequency, the Δ FREQ tuning adjustment is provided to adjust accurately the crystal frequency of each crystal used. This is done so that first mixer stage V5 i-f signal output is exactly 455 kc or 3,955 kc, as applicable. Otherwise, the 455 kc or 3,955 kc i-f signal output of V5 does not center up exactly at the midband alinement points of the subsequent i-f selective circuits provided for each signal.

58. First Mixer Stage V5

(fig. 28)

a. First mixer stage V5 functions as a frequency converter for each of the six frequency bands of the

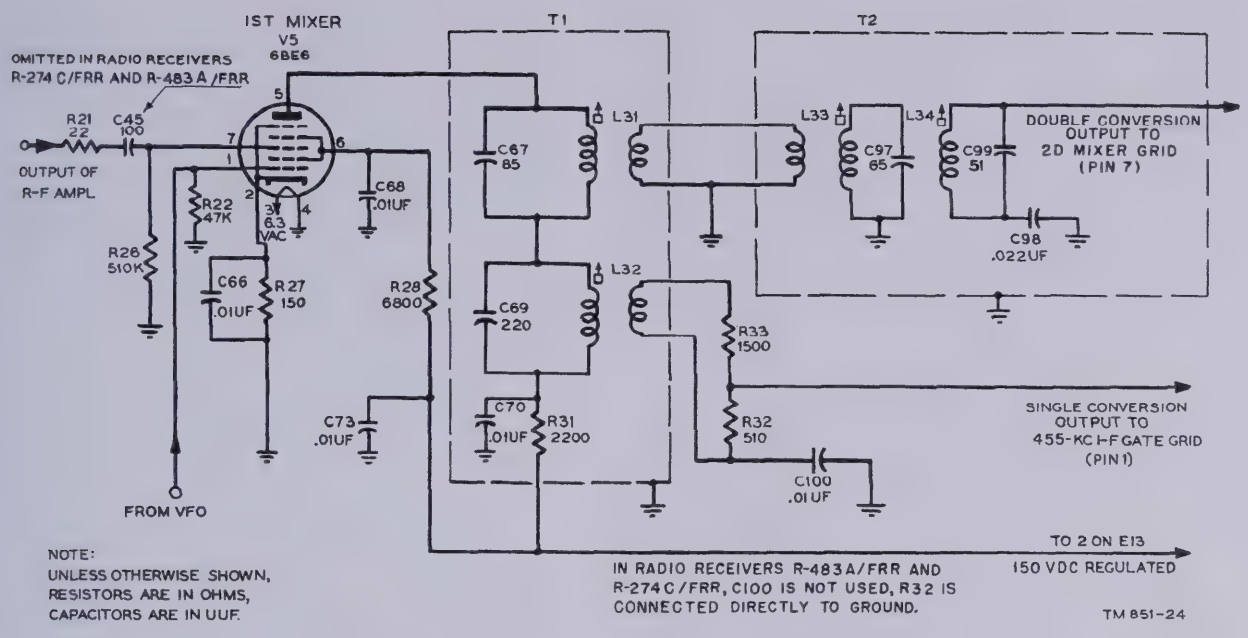

Figure 28. Radio receiver, all types, schematic diagram of first mixer stage.

receiver. With the signal tuned in, it derives signal input from second r-f amplifier V2 which is at a much lower level than the conversion oscillation input to it from vfo V4. Because of the electronic additive mixing provided by first mixer tube V5, the plate current of the tube contains a frequency component at 455 kc for signals tuned in on band 1, 2, or 3. The 455-kc signal is provided with stage circuitry resonant to 455 kc, across which the stage output signal at 455 kc is developed. The stage amplification provided is negligible.

b. Regulated B+ voltage (from terminal 2 of E13) is fed to the screen grid through the screen grid decoupling circuit (screen grid voltage-dropping resistor R28, r-f bypass capacitor C73, and screen grid r-f bypass capacitor C68). Regulated B+ voltage is fed to the plate through a decoupling circuit (resistor R31 and capacitor C70), and the primary of mixer plate transformer T1—that is, the primaries of r-f transformers L32 and L31. Self-bias voltage is developed in cathode resistor R27 which is bypassed for rf by capacitor C66. Resistor R22 is the grid-leak resistor; it completes the grid circuit so that the cathode self-bias of V5 and the grid-leak bias across it (due to vfo V4) are both effective at the grid.

c. The signal voltage output of second r-f amplifier stage V2 is fed to the pin 7 grid of the 6BE6 tube used in the stage through parasitic suppressor R21 and coupling capacitor C45. It is applied across the grid d-c return resistor R26. In Radio Receivers R–483A/FRR and R–274C/FRR, a direct connection is used; C45 is omitted. The output of the vfo (V4), 455 kc higher in frequency than the signal, is impressed to the pin 1 control grid of V5. The desired signal output of V5 at 455 kc (for bands 1, 2, and 3) is developed across the primary of L32 which is adjustable iron-core tuned so that, in conjunction with the capacitor C69, it is parallel resonant to 455 kc. The primary of L31 represents a low-impedance path for the signal at 455 kc. The mutual coupling between the primary and secondary of L32 provides for the desired 455-kc signal output of the stage to appear across the secondary loading of L32, consisting of resistors R32 and R33. R32 and R33 act as a voltage divider so that the stage output across R32 can be fed directly to the 455-kc i-f gate V7.

d. A signal tuned in on band 4, 5, or 6 results in the stage output to be at 3,955 kc. The desired 3,955-kc signal is developed across the stage output resonant circuit, consisting of capacitor C67 and the primary of L31; L31 is adjustable iron-core tuned for resonance. C69 presents a low-impedance path for the signal at 3,955 kc. The mutual coupling between the windings of L31 provides the 3,955-kc signal as input to r-f transformer T2. The desired 3,955-kc signal output from T2 is fed to second mixer stage V6. T2 comprises secondary tuned r-f transformer L33

and tuned r-f coil L34, each of which is adjustable iron-core tuned to 3,955 kc. Capacitors C97 and C99, respectively, provide for the parallel resonance of L33 and L34. L34 by being loosely coupled to the tuned secondary of L33 provides for the 3,955-kc signal path through T2 to have added preselection with regard to adjacent signal channel selectivity, so that high image rejection ratios develop with regard to the higher signal frequencies tuned in on bands 4, 5, and 6.

59. 455-Kc I-F Gate V7

(figs. 29, 30, and 31)

a. The 455-kc i-f gate, V7, when operative, completes the 455-kc i-f channel of the receiver from first mixer stage V5 to the i-f filter circuit. When inoperative, it acts as an open circuit. With the signal tuned in on band 1, BAND CHANGE switch S1 rotor cam provides for single-double conversion switch S4 to assume its single conversion position, making the tube operative.

b. Screen voltage is applied (from terminal 11 of terminal board E17) through the REC position of SEND-REC switch S9, the single conversion position of switch S4, and the screen grid decoupling circuit (screen grid voltage dropping resistor R39, r-f bypass capacitor C102, and screen grid r-f bypass capacitor C105). Plate voltage is applied (from terminal 11 of E17) through the decoupling circuit (resistor R41 and capacitors C109 and C108) and the primary of i-f transformer L36. In figure 29, negative bias voltage is applied to the control grid (from terminals 3 and 9 of E17) through resistors R34 and R32. In figures 30 and 31, self-bias is provided by resistor R112. In figure 31, negative bias is applied to the grid through AVC-MAN switch S8 and resistors R53 and R32. When S8 is in the MAN position, the bias rectifier negative d-c voltage from the movable arm of the RF GAIN control is fed directly to S8. When S8 is in the AVC position, this is still the case, but resistor R97 is connected between S8 and R93. Also, the avc negative bias developed by the avc rectifier is applied fully to the grid through S8, R53, and R32. Capacitor C165 and resistor R53 act as a filter in the avc line and have some effect on the time constant of the avc circuit. R97 isolates the avc bias to the grid circuit. Resistor R94 provides a negative bias of 1 dc-volt to the grid when R93 is set fully clockwise; this is its normal setting when operating avc. When R93 is set elsewhere than at maximum, the actual negative bias effective at the grid is a complex resultant of the avc bias developed and the

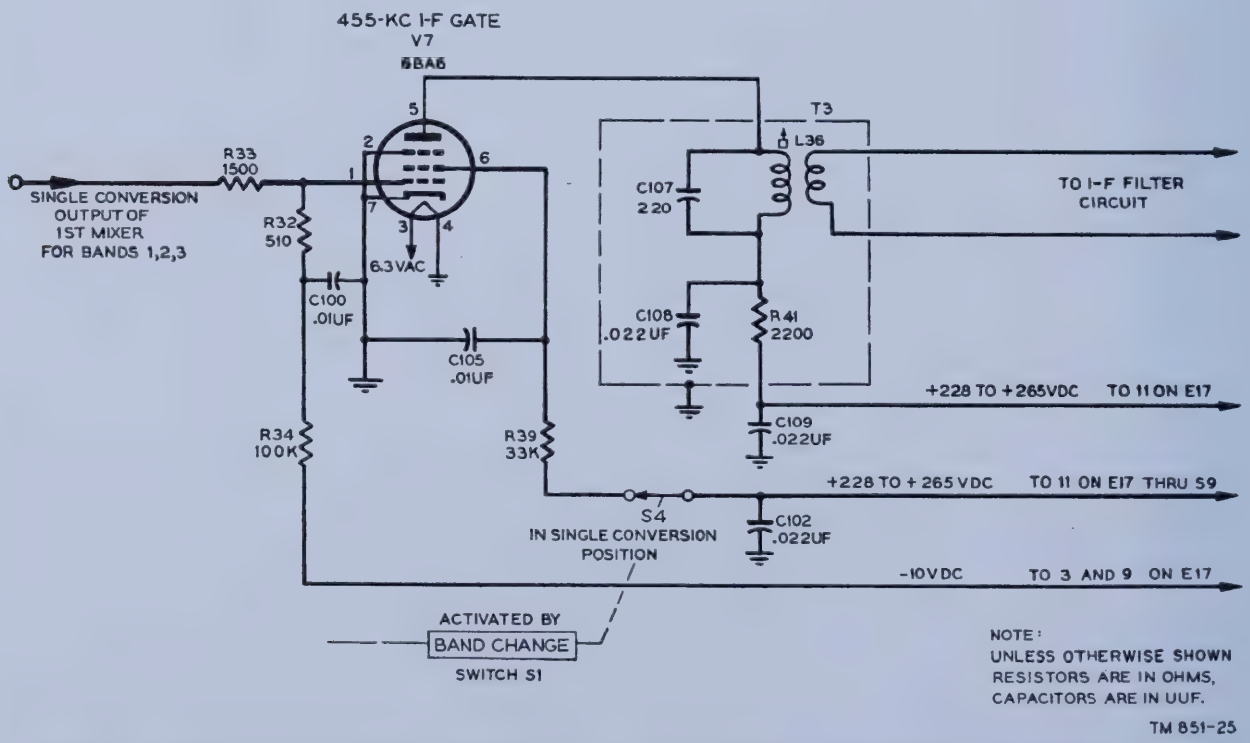

Figure 29. Radio Receivers R–483/FRR, R–320A/FRC, and R–274A/FRR, schematic diagram of the 455-kc i-f gate.

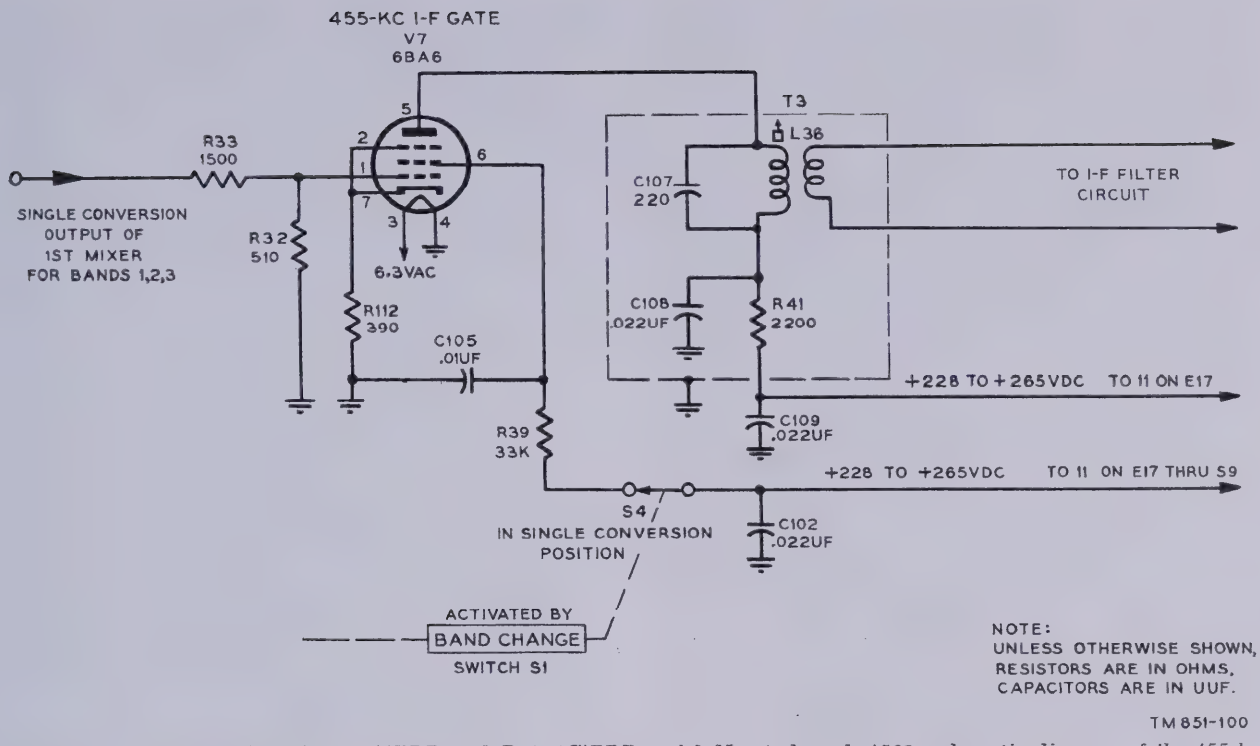

Figure 30. Radio Receivers R–483A/FRR and R–274C/FRR serial No. 1 through 1569, schematic diagram of the 455-kc i-f gate.

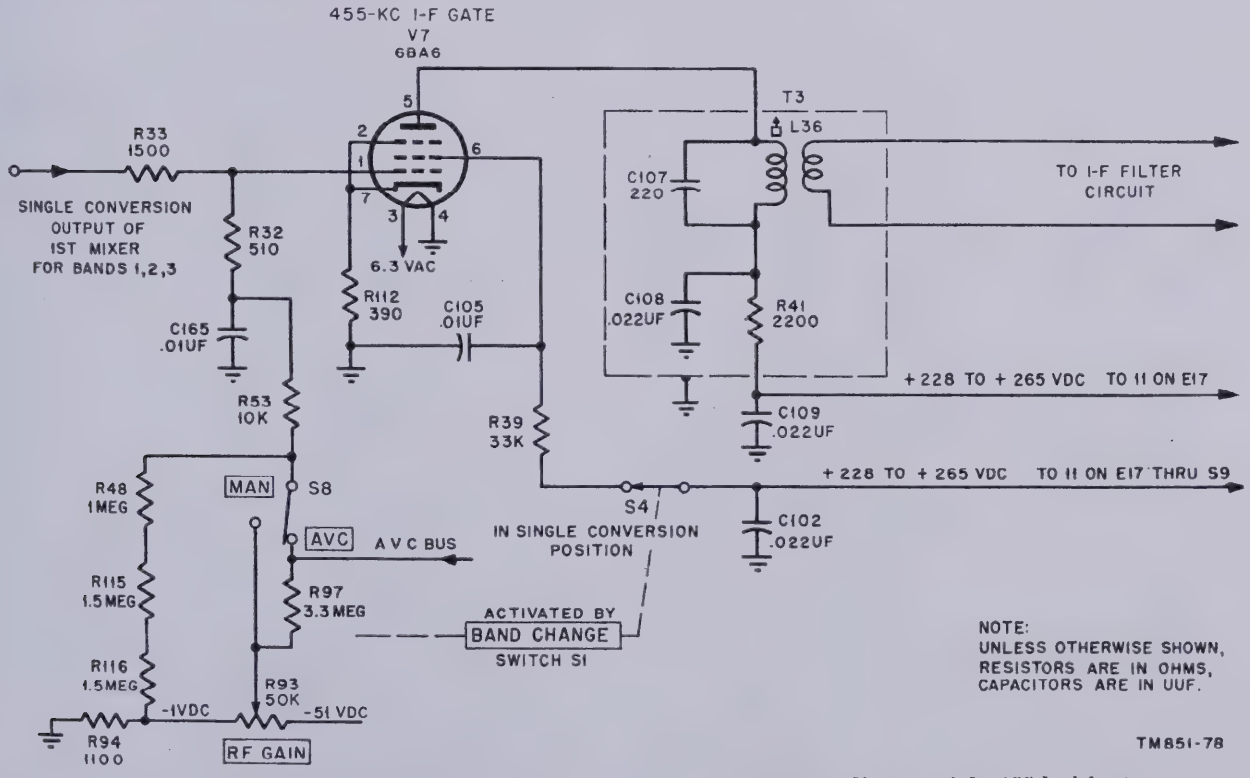

Figure 31. Radio Receiver R–274C/FRR from serial No. 1570, schematic diagram of the 455-kc i-f gate.

bias caused by the setting of R93. The use of resistors R48, R115, and R116 as a voltage divider for the avc bias developed is explained in paragraph 54*b*. These resistors are shown in figure 31, since they influence the actual negative bias effective at the grid when S8 is at AVC.

c. The 455-kc signal input to the control grid of the 6BA6 tube used in the stage is provided through R33 across grid input resistor R32 from first mixer stage V5. In figure 29, resistor R34 and capacitor C100 isolate the signal to the grid. These are not required in figures 30 and 31. In figure 31, decoupling is provided by R53 and C165. The stage 455-kc signal output, to the i-f filter circuit, is mutually coupled to the secondary of the L36 i-f transformer. The primary of L36, shunted by capacitor C107, is the parallel resonant load impedance of the stage, the adjustable iron core of L36 providing for alinement to 455 kc.

60. 3.5-Mc Crystal Oscillator V8

(fig. 32)

a. The 3.5 mc crystal oscillator is a fixed-frequency crystal-controlled oscillator in which the tube plate-to-grid interelectrode capacitance provides for the necessary oscillator feedback. The 3.5-mc crystal Y7 is used in the oscillator to maintain highest possible receiver frequency stability on band 4, 5, or 6. The 3.5-mc oscillator output is used to heterodyne-detect the 3,955-kc signals to 455 kc. The 3.5-mc oscillator frequency is chosen below the 3,955-kc signal conversion frequency so that the oscillator predominant second harmonic frequency at 7.0 mc is not within the 7.4- to 14.8-mc frequency range of band 4, the lowest frequency band for which the 3.5-mc oscillator is operative.

b. Plate voltage is applied (from terminal 11 of terminal board E17) through S9 and S4 (in the double conversion position), the decoupling circuit (resistor R37 and capacitor C103), the plate circuit decoupling network (plate voltage-dropping resistor R38 and plate r-f bypass capacitor C104), and r-f choke L35. Self-bias, provided by grid-leak resistor R36, is used so that the oscillator is self-starting. When the crystal and its holder are replaced by their equivalent circuit (fig. 32), the effective capacitance shunting R36 is equivalent to a grid-leak capacitance.

c. When BAND CHANGE switch S1 is indented so that S4 is set to its double conversion position, the B+ voltage applied to the plate of the

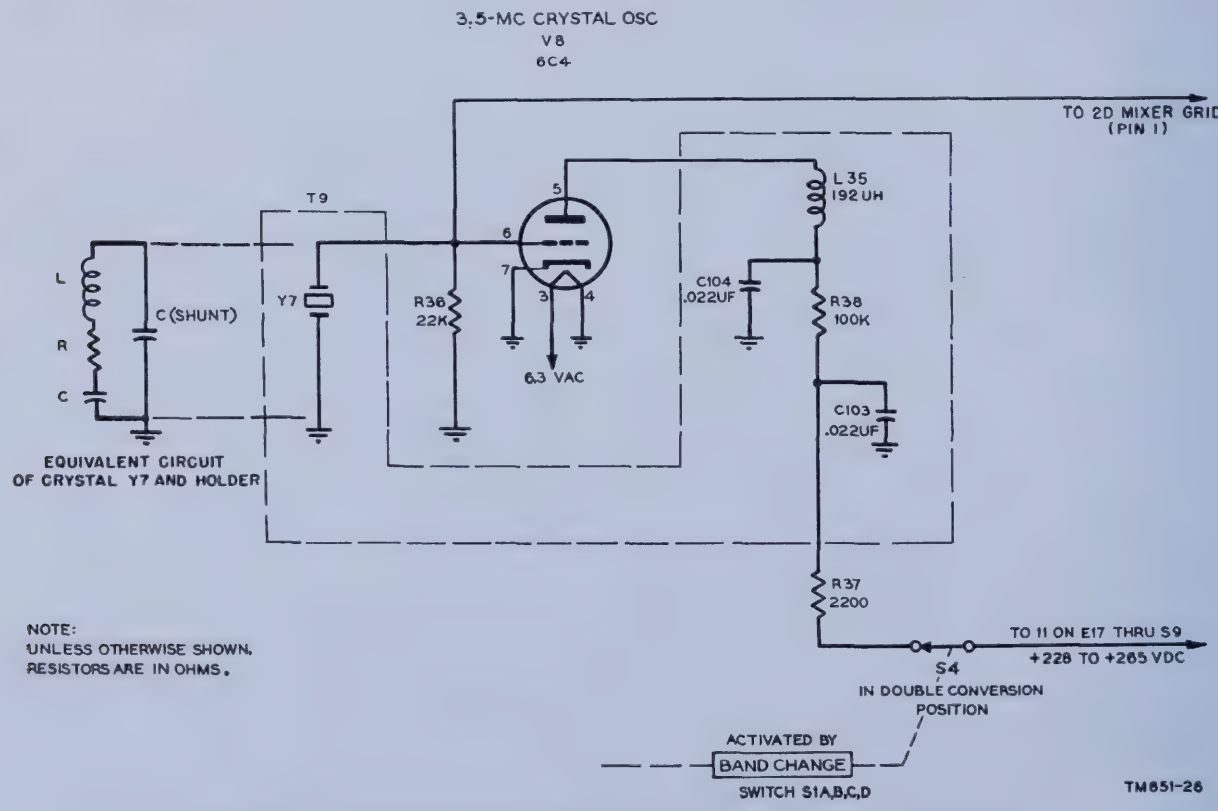

Figure 32. Radio receiver, all types, schematic diagram of 3.5-mc crystal oscillator.

6C4 tube used causes a disturbance in the tube grid circuit so that grid current starts to flow. The d-c component of the grid current flows through R36 to self-bias the tube, and the a-c component of the grid current flowing through the crystal holder capacitance causes amplified oscillations to develop at the tube plate. Since L35 provides inductive loading, oscillations are set up in the equivalent tuned circuit provided by Y7 between grid and cathode. The oscillator output at 3.5 mc, developed across crystal Y7, is fed directly to second mixer stage V6.

61. Second Mixer Stage V6

(fig. 33)

a. Second mixer stage V6 functions as a frequency converter for signals tuned in on band 4, 5, or 6. The second mixer stage derives 3,955-kc signal input from first mixer stage V5 which is at a much lower level than the 3.5-mc input it derives from 3.5-mc crystal oscillator V8. Because of the heterodyne detection provided by second mixer tube V6, the plate current of the tube contains a frequency component at 455 kc for signals tuned in on band 4, 5, or 6. The 455-kc signal is provided with stage circuitry resonant to 455 kc, across which the stage output signal at 455 kc is developed. The stage gain provided is negligible.

b. B+ voltage is fed to the screen grid (from terminal 11 of E17) through S9 (in REC position), S4 (in double conversion position), the decoupling circuit (resistor R37 and capacitor C102 and C103), and the screen grid decoupling circuit (screen grid voltage-dropping resistor R40 and screen grid r-f bypass capacitor C106). B+ voltage is fed to the plate (from terminal 11 of E17) through the plate decoupling circuit (resistor R41 and capacitors C108 and C109), and the tuned primary of L36 i-f transformer. In radio receivers, all types other than R–274C/FRR, from serial No. 1570, fixed bias is applied to the pin 7 signal grid from the junction of R94 and R93 through the decoupling circuit (resistor R35 and capacitor C98) and r-f choke coil L34. In Radio Receiver R–274C/FRR from serial No. 1570, negative bias is applied to the grid in a like manner but from AVC-MAN switch S8. When S8 is in the MAN position, the bias rectifier negative d-c voltage from the movable arm of the RF GAIN control is impressed directly to S8. When S8 is in the AVC position, this is still the case, but resistor

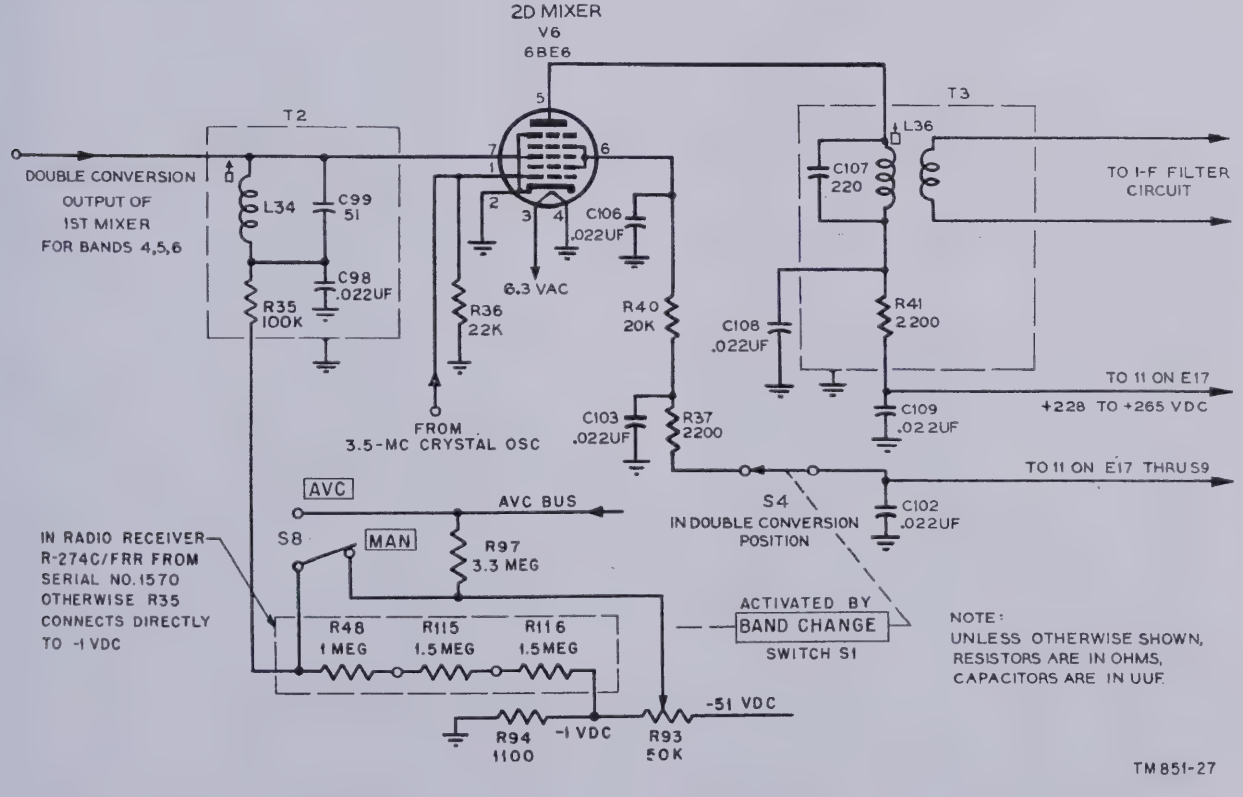

Figure 33. Radio receiver, all types, schematic diagram of second mixer.

R97 is connected between S8 and R93. Also, the avc negative bias developed by the avc rectifier is applied fully to the grid through S8, R35, and L34. Capacitor C98 and resistor R35 act as a filter in the avc line and have some effect on the time constant of the avc circuit. The functions of R97, R94, R93, R48, R115, and R116 are as explained in paragraph 59*b*. Resistor R36 is the grid-leak resistor. It completes the oscillator injection grid circuit so that the grid-leak bias, due to the 3.5-mc crystal oscillator, is effective at this grid.

c. The 3,955-kc signal voltage output of first mixer stage V5, for band 4, 5, or 6, is impressed to the pin 7 grid of the 6BE6 tube used in this stage. Also, the 3.5-mc oscillations are impressed to the pin 1 grid of V6. The desired 455-kc signal output of V6 to the i-f filter circuit is coupled mutually to the secondary of i-f transformer L36. Since L36 is common to both second mixer stage V6 and 455-kc i-f gate V7, the parallel resonant load impedance of V6 also is that of V7, as explained in paragraph 59*c*.

62. I-F Filter Circuit

(fig. 34)

a. The i-f filter circuit does not use a vacuum tube. It comprises i-f transformer subassembly T3 and the S5A dual section of SELECTIVITY switch S5. T3 consists of i-f transformer L36, a bridge network, r-f coil L37, and capacitors C113 and C114 in series, which parallel L37. The bridge network arms consist of identical capacitors C110 and C112 connected in series across the secondary of L36, 455-kc crystal Y8, and XTAL PHASING capacitor C111. C111 is the dual stator type so that, regardless of its rotor setting, the total capacity shunting L36 remains constant. With C111 set to its knob dial diamond midcapacitive value, L37 and L36 are adjustable iron-core tuned to provide for the alinement of the i-f filter circuitry to 455 kc. The alinement is completed for the sharpest selective position of S5 so that the tuned circuits are resonant to 455 kc for the sharpest selectivity provided by crystal Y8. One of the dual sections of S5A of SELECTIVITY switch S5 shorts out the crystal for the 13 KC, 8 KC, and 3 KC bandwidth selectivity positions of the switch. The other of the dual sections of SELECTIVITY switch S5A provides L37 with a ground connection for each of these switch positions. For the 1.3 KC, .5 KC, and .2 KC positions of S5A, the short across Y8 is removed by the former of the dual sections of S5A and the latter dual section of S5A provides for the adding of resistance in series with L37. For the 1.3 KC selectivity position, resistor R45 is added in series with L37; for the .5 KC position, resistors R45 and R46 are added in series with L37; and for the .2 KC position, resistors R45, R46, and R47 are added in series with L37. By adding resistance in series with L37, the figure of merit or Q of the parallel resonant circuit comprising L37, shunted by C113 and C114 in series, decreases. The resistive component of the impedance of this parallel resonant circuit, which is in series with Y8, also decreases. The effect of adding resistance in series with L37 is to decrease the resistive component of the impedance in series with Y8 so that the i-f filter circuit selectivity can be made to approach that of the crystal (Y8) alone. The electrical equivalent of the vibrating 455-kc crystal is a series circuit consisting of capacitance (C), inductance (L), and resistance (R) and a parallel capacitance (C shunt) due to the crystal and its holder capacitances. The crystal is series resonant to 455 kc but with its holder is also parallel resonant to a frequency slightly different than 455 kc. Bridge network XTAL PHASING capacitor C111 provides for overneutralizing, underneutralizing, or neutralizing the shunt capacitance of the crystal and holder so that the rejection notch, resulting from the parallel resonance of the crystal, may be shifted in frequency to coincide with the frequency of the heterodyne interference existent, if any. C111 is designed so that its midcapacitive value just neutralizes the shunt capacitance of the crystal and holder. When moved from this position, it does not affect the alinement of the i-f filter circuit since its full capacitance in series with Y8 is connected across L36.

b. When a 455-kc signal is impressed across the primary of L36, it is coupled mutually to the secondary of L36, providing input to the i-f filter bridge network at A-A. The bridge network output at 455 kc is available at B-B, between which is connected the bridge network load. Since Y8 is series resonant to the 455-kc signal, it presents only a low resistive impedance R to the signal; the signal across C110 is that applied to Y8 in series with the load. That part of the 455-kc signal developed across C114 is applied through grid stabilizing resistor R42 to first i-f amplifier stage V9. When heterodyne interference at a frequency close to 455 kc appears at the A-A terminals of the bridge, and C11 is set properly,

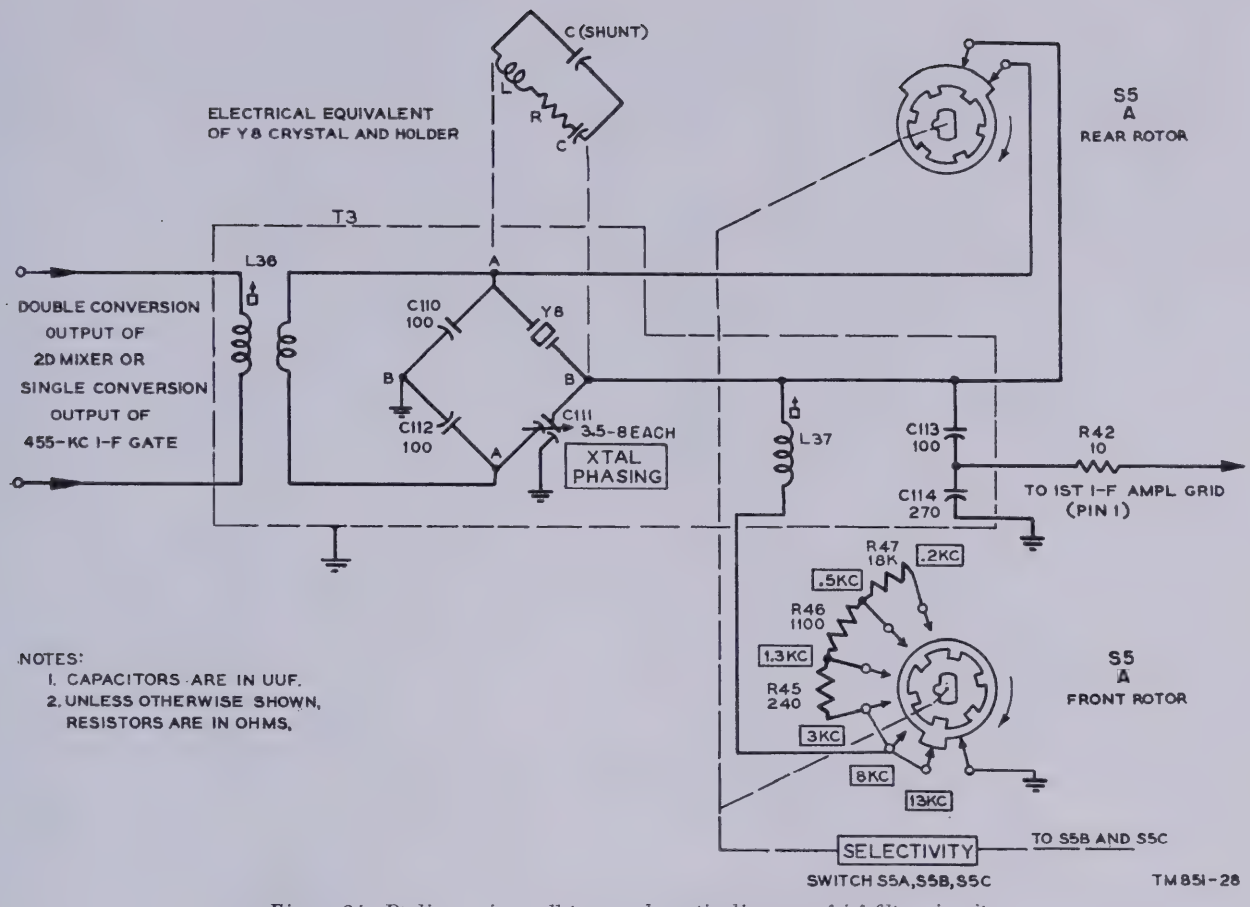

Figure 34. Radio receiver, all types schematic diagram of i-f filter circuit.

the parallel resonance of Y8 to the undesired interference provides for a high resistive impedance in series with the load such that the interference available to the load is negligible. This is because the load, resonant to 455 kc, presents a low impedance to the interference.

c. Note that the part of C111 that is not a part of the bridge network is always in parallel with L37. Since L37 is part of a broadly tuned resonant circuit when resistance is added in series with it, as for each XTAL position of S5, the alinement effect of C111 across L37 is negligible. Further, when S5A shorts out Y8, as for each of the NON-XTAL positions of S5, the bridge part of C111 parallels C110 and C112 in series and the rest of C111 parallels C110 alone. Again the alinement effect of C111 is negligible because the selectivity of the i-f filter circuit is at least 3 kc.

63. First I-F Amplifier Stage V9

(figs. 35 and 36).

a. First i-f amplifier stage V9 comprises selective circuitry contained in i-f transformer subassembly T4. I-f transformer L40 has four identical windings, one of which constitutes the primary. The three secondary windings of L40, because of their physical location in relation to the primary, provide for the coefficient of coupling to be different for each secondary winding. The 13 KC, 8 KC, and 3 KC NON-XTAL stator switch contacts of the S5B section of SELECTIVITY switch S5 are connected to the three secondary windings of L40, progressively, each is more loosely coupled to the primary. The primary of L40 is connected in series with iron cup shielded r-f coil L38 and the connection common to each secondary is connected to the iron cup shielded r-f coil L39. L38 and L39 are identical. Capacitor C117 shunts the full primary of T4, and capacitors C119 and C120 in series always shunt the full selected secondary of T4; resonance to 455 kc is provided by the adjustable iron-core alinement of L38 and L39. The mutual inductance of L40 provides for the bandwidths developed to center about the nominal 455-kc resonant response of the tuned circuitry of T4. For any

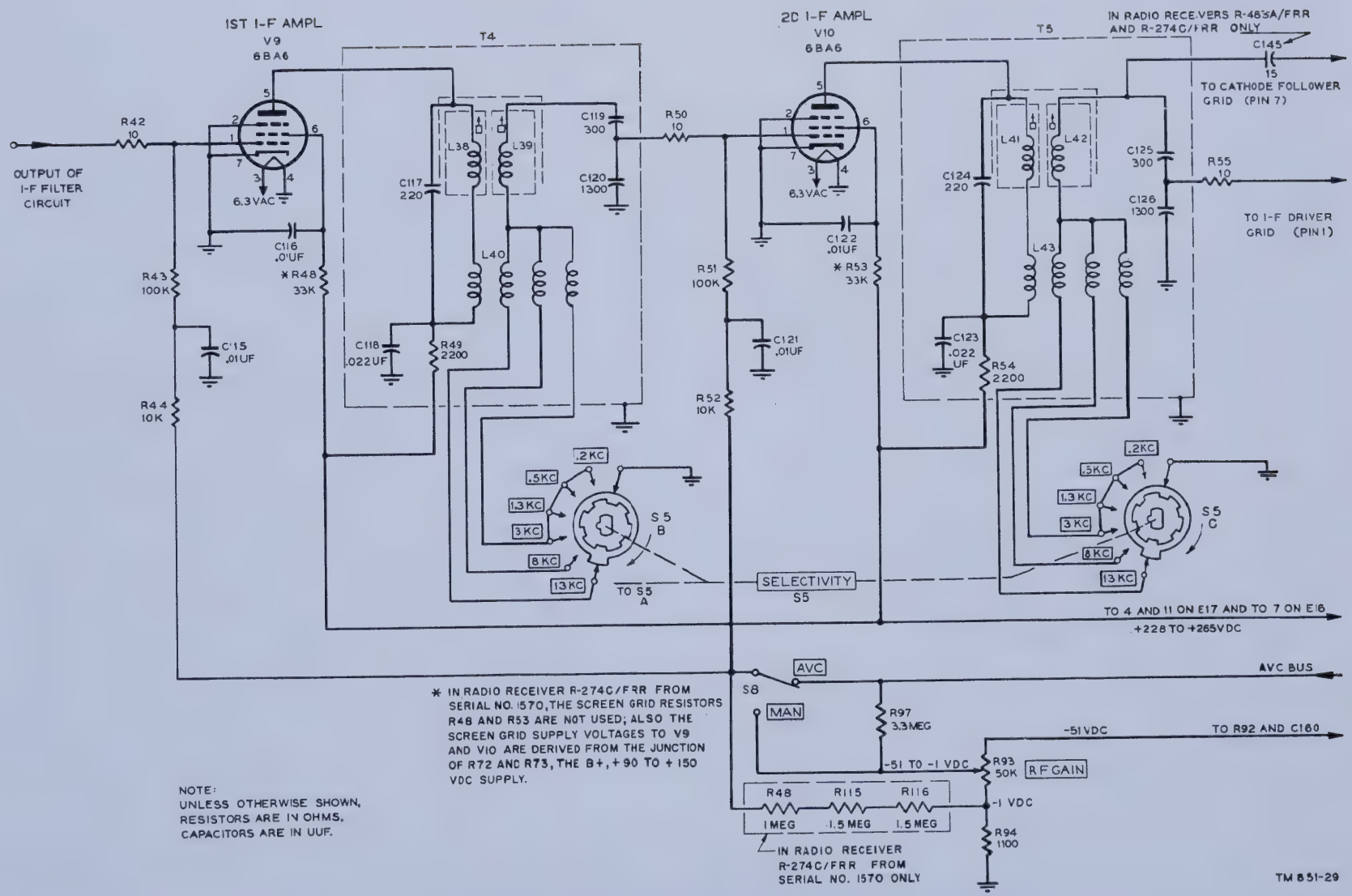

Figure 35. Radio receiver, all types other than R-320A/FRC, diagram of two-stage i-f amplifier.

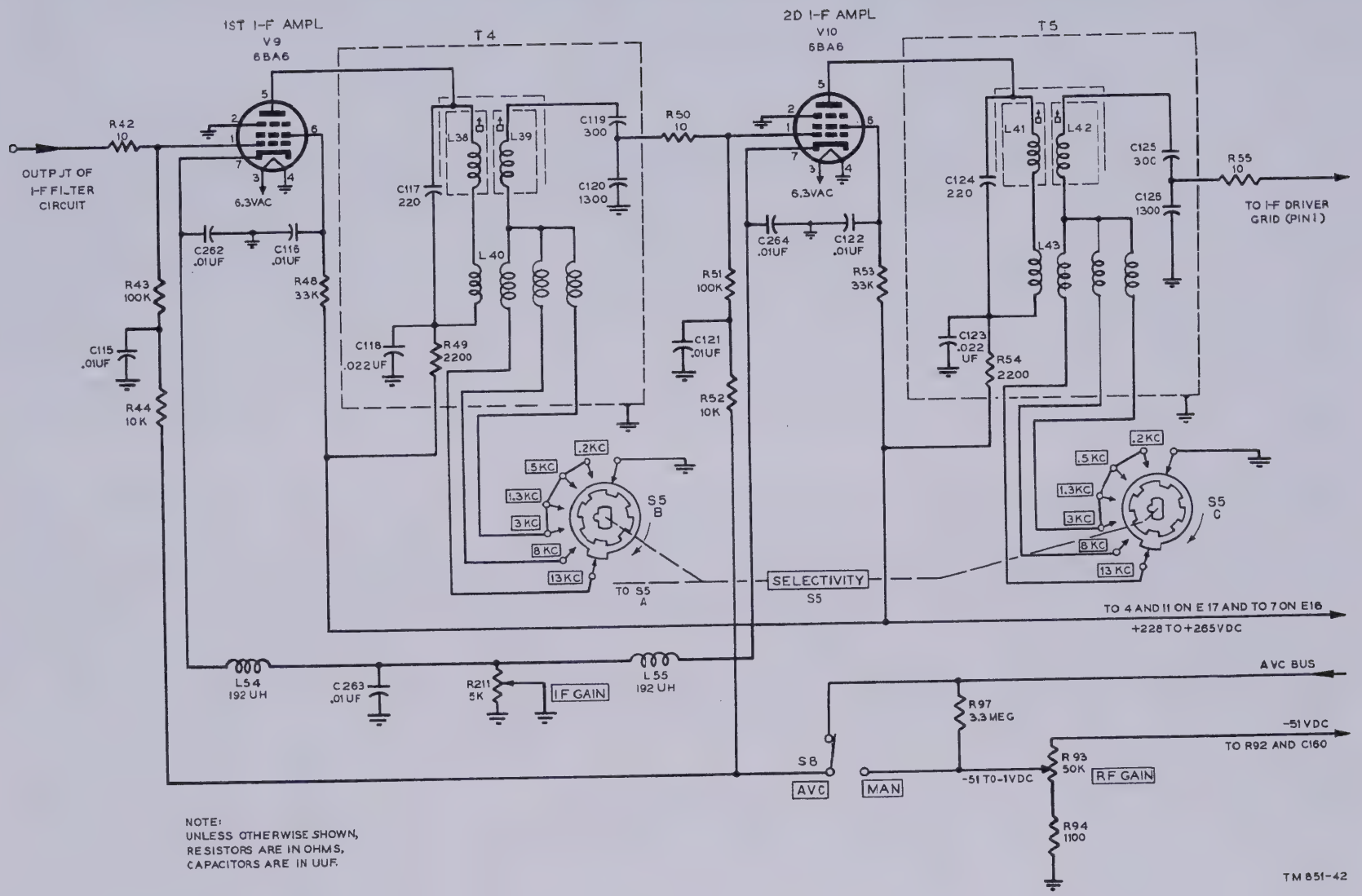

Figure 36. Radio receiver R–320A/FRC, schematic diagram of two-stage i-f amplifier.

one of the three XTAL positions of S5, the S5B section of the switch provides for the bandwidth to be the narrowest developed by the stage—that is, that involving the secondary of L40 most loosely coupled to the primary, and connected to the 3-kc stator contact of the switch.

b. In all types of the radio receiver except the R–274C/FRR, from serial No. 1570, screen grid voltage is applied from terminal 4 on terminal board E17 through the screen grid decoupling circuit (screen and voltage-dropping resistor R48 and screen r-f bypass capacitor C116). In Radio Receiver R–274C/FRR, from serial No. 1570, R48 is not used, and the screen voltage is applied from the junction of R72 and R73 (fig. 102). Plate voltage is applied (from terminal 7 of E16) through the decoupling circuit (resistor R49 and capacitor C118), the primary of L40, and L38. Bias voltage is applied to the grid through AVC-MAN switch S8 and resistors R44 and R43. When S8 is in the MAN position, the bias rectifier negative d-c voltage from the movable arm of RF GAIN control R93 is impressed directly to S8. When S8 is in the AVC position, resistor R97 is connected between S8 and R93. Also, the avc negative bias developed by the avc rectifier is applied to the grid through S8, R44, and R43. Capacitor C115 and R44 act as a filter in the avc line and have some effect on the time constant of the avc circuit. R97 isolates the avc bias to the grid circuit. Resistor R94 provides a negative bias of 1 volt to the grid when R93 is set fully clockwise. In Radio Receiver R–274C/FRR, from serial No. 1570, resistors R48, R115, and R116 affect the actual bias voltage effective for V9, when S8 is at AVC.

c. Signal voltage output from the i-f filter circuit at 455 kc is fed through grid stabilizing resistor R42 to the control grid of the 6BA6 tube used in the stage. R43 isolates signal input voltages to the control grid. The amplified signal output of the stage appears across C119 and C120 in series. The portion across C120 is fed to second i-f amplifier stage V10.

d. Radio Receiver R–320A/FRC incorporates an IF GAIN control (fig. 36) which provides for the separate adjustment of the gain of two-stage i-f amplifiers V9 and V10. IF GAIN control R211 is connected from the junction of the r-f coils L54 and L55 to ground. Capacitors C262, C263, and C264 in conjunction with L54 and L55 form a filter network between the cathodes of V9 and V10 and ground, so that, with regard to the 455-kc signal, both are effectively at ground potential. The d-c voltage drop across the IF GAIN control, caused by the d-c flow from both tubes, provides for self-biasing each tube. R211 controls the i-f gain of both tubes.

64. Second I-F Amplifier Stage V10

(figs. 35 and 36)

a. I-f transformer subassembly T5 of this stage is identical with i-f transformer subassembly T4 (par. 63). Also, i-f transformer L43 is identical with L40, and iron cup shielded r-f coils L41 and L42 are identical with each other and with either L38 or L39. Capacitor C124 shunts the full primary, and capacitors C125 and C126, in series, shunt the full secondary selected by the S5C section of SELECTIVITY switch S5 associated with the stage. Resonance to 455 kc for both tuned circuits of T5 is provided by the adjustable iron-core alinement of L41 and L42. The S5B and S5C sections of S5 are identical.

b. In all types of the radio receiver except the R–274C/FRR, from serial No. 1570, screen grid voltage is applied (from terminal 11 of E17) through the screen grid decoupling circuit (screen grid voltage-dropping resistor R53 and screen grid r-f bypass capacitor C122). In Radio Receiver R–274C/FRR, from serial No. 1570, R53 is not used; also, the screen voltage is applied from the junction of R72 and R73. Plate voltage is applied (from terminal 7 of E16) through the decoupling circuit (resistor R54 and capacitor C123) and the primary of L43 and L41. Bias voltage is applied to the grid through switch S8 and resistors R52 and R51. The bias voltage sources for V10 are identical with those outlined for V9 (par. 63*b*), but they feed through S8, R52, and R51. Capacitor C121 and R52 act as a filter in the avc line and have some effect on the time constant of the avc circuit.

c. Signal voltage output from first i-f amplifier stage V9 at 455 kc is fed through grid stabilizing resistor R50 to the control grid of the 6BA6 tube used in the stage. Resistor R51 isolates the signal input voltages to the control grid. The amplified signal output of the stage appears across C125 and C126 in series. That portion across C126 is fed to i-f driver stage V11 through R55.

d. In Radio Receivers R–483A/FRR and 274C/FRR, the junction of L42 and C125 (figs. 100 through 102) provides amplified signal output to cathode follower V16A. The IF GAIN control

circuitry (fig. 36), incorporated in the Radio Receiver R–320A/FRC, is described in paragraph 63*d*.

65. I-F Driver V11

(fig. 37)

a. The i-f driver stage functions as a power amplifier to supply the power requirements of detector V14A and the avc rectifier V14B. The tube used in this stage also isolates the load from second i-f amplifier stage V10.

b. Regulated screen and voltage is applied (from terminal 1 of the terminal board E15) through the screen grid decoupling circuit (resistor R58 and capacitor C129A). Plate voltage is applied (from terminal 7 of E16) through the decoupling circuit (resistor R59 and capacitor C129B) and r-f choke L47. Capacitors C138, C139, and C145 block the plate voltage from the load. In Radio Receivers R–483/FRR, R–320A/FRC, and R–274A/FRR, bias voltage is shunt-fed (from terminal 9 of E17) through resistors R57, R56, and R55. In Radio Receivers R–483A/FRR and R–274C/FRR, resistor R113 in conjunction with R57, R56, and R55 acts as a voltage divider; the bias voltage is that across R113. Electrolytic capacitor C128 and resistor R57 act as a filter in the bias supply line to the grid.

c. Signal voltage at 455 kc, derived from second i-f amplifier stage V10, is fed through grid stabilizing resistor R55 to the control grid of the 6BA6 tube used in the stage. The stage provides the 455-kc signal in Radio Receivers R–483/FRR, R–320A/FRC, and R–274A/FRR, through C139 and C138, at a power level high enough to drive detector V14A and avc rectifier V14B, respectively. It is also available through C145 to cathode follower V16A. In Radio Receivers R–483A/FRR and R–274C/FRR, input to V16A is provided as outlined in paragraph 64*d*. Resistor R56 and capacitor C127 isolate the 455-kc input signal to the grid, and L47 isolates the 455 kc output signal to the stage load.

66. Beat-Frequency Oscillator V13

(fig. 38)

a. Bfo V13 is a Colpitts-type oscillator. The oscillator tank circuit, contained in oscillator subassembly T6, consists of the series circuit comprising r-f coils L44, L46, BEAT OSC. r-f coil L45, capacitor C132, and capacitors C130 and C131 in parallel. With adjustable iron core of L45 set to its 0 position, the adjustable iron core of L44 provides for the alinement of the oscillator to its nominal 455-kc frequency. The BEAT OSC. control provides the means from the front panel to vary the oscillator frequency to any frequency within ±3 kc of 455 kc.

b. Regulated plate voltage is applied (from terminal 2 of E13) through the CW position of MOD-CW switch S7, plate circuit decoupling resistor R77, and the plate voltage-dropping re-

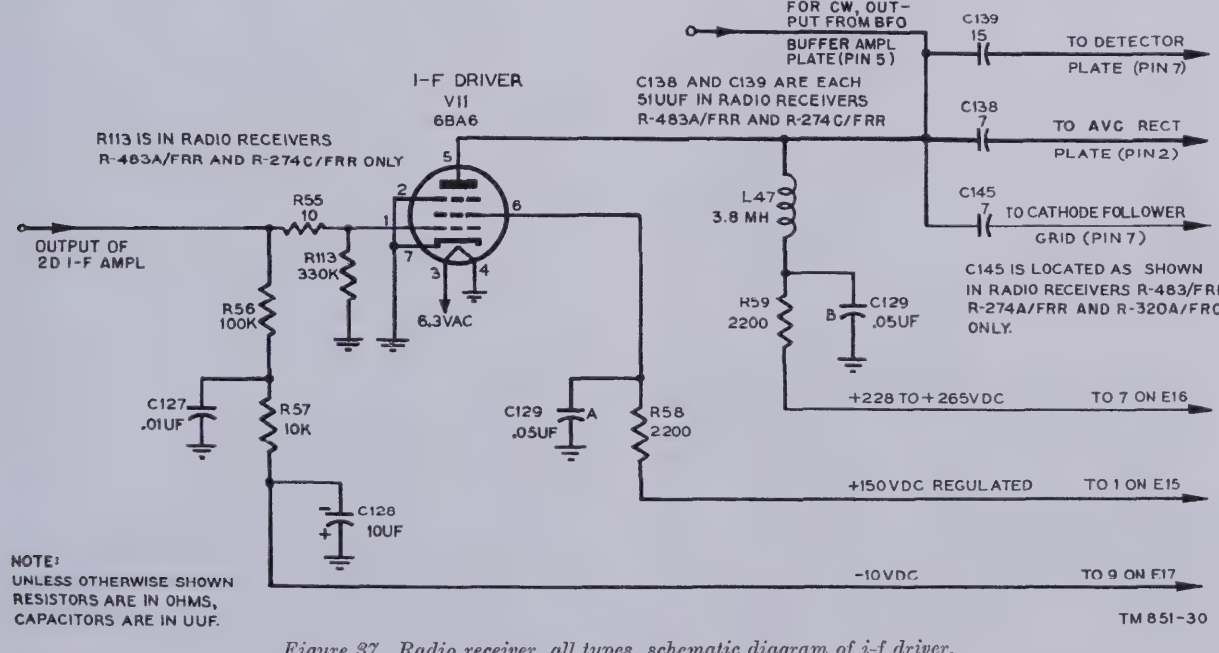

Figure 37. Radio receiver, all types, schematic diagram of i-f driver.

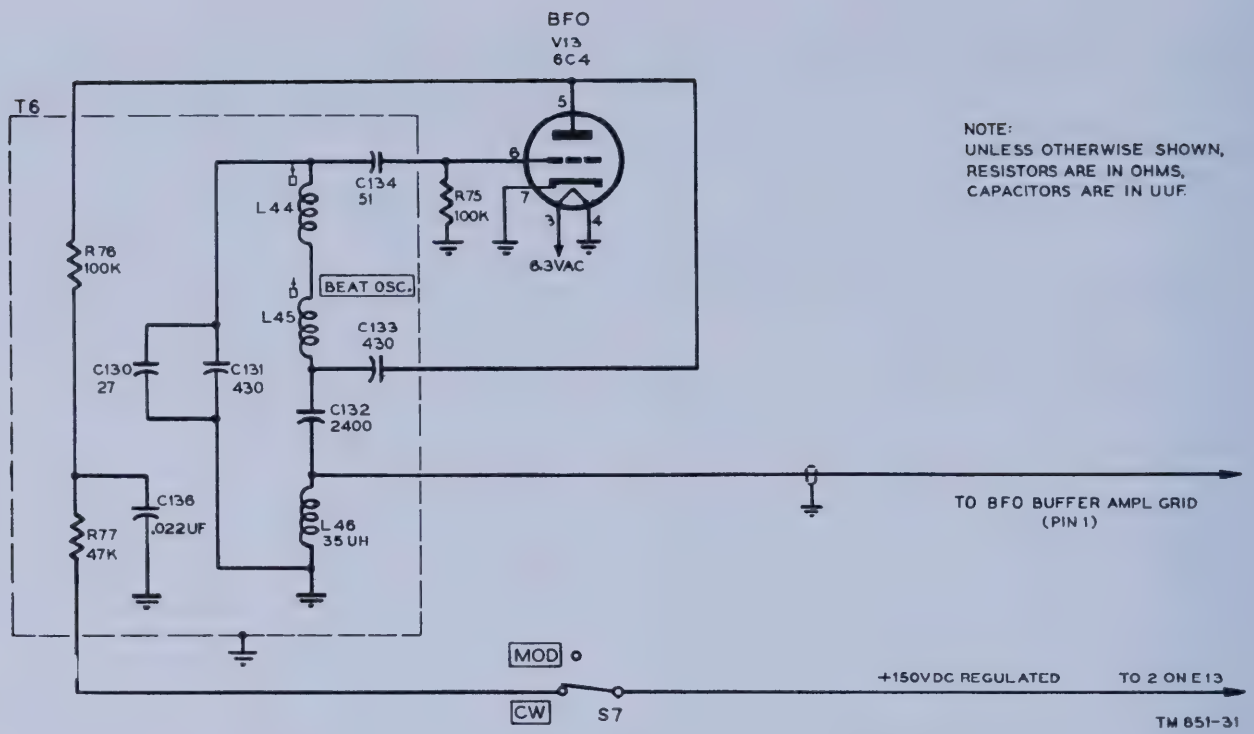

Figure 38. Radio receiver, all types, schematic diagram of beat-frequency oscillator.

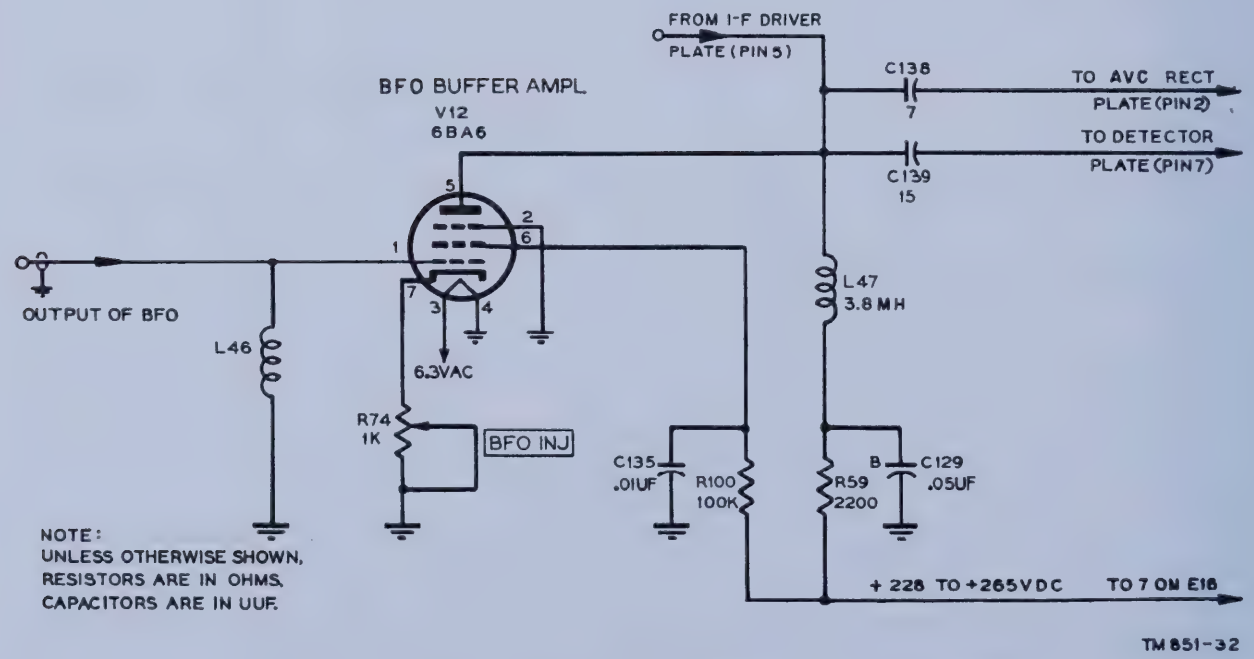

Figure 39. Radio receiver, all types, functional diagram of the bfo buffer amplifier.

sistor R76. Capacitor C133 blocks the plate voltage from the tank circuit. Self-bias, provided by the combination of grid-leak resistor R75 and grid capacitor C134, is used so that the correct conditions are always present for the oscillations of the bfo to be self-starting.

c. The oscillations developed by the bfo closely approximate the resonant frequency of the bfo tank circuit itself. When the MOD-CW switch (S7) is in the CW position, the application of regulated B+ voltage to the plate of the 6C4 tube causes a disturbance in the tube grid circuit so that grid current starts to flow. The d-c component of the grid current, flowing through R75, self-biases the tube. The a-c component of the grid current causes the tank circuit to provide resonant output to the grid through C134 at the frequency of the tank circuit oscillations. Tube 6C4, having amplifying properties, provides for the oscillations at its plate to be of correct phase so that when fed through C133 to the tank circuit, oscillations developed can be sustained. The combination of capacitor C136 and R76 isolates the oscillations to the tank circuit. The bfo output fed to bfo buffer stage V13 by a shielded cable lead is developed in the tank circuit across L46.

67. Bfo Buffer-Amplifier Stage V12

(fig. 39)

a. Bfo buffer-amplifier stage V12 is used to eliminate *lock-in* between the frequency of the bfo output and the 455-kc signal output from i-f driver stage V11. Thus, for the reception of c-w signals, the 455-kc signal from i-f driver stage V11 can be tuned sharply to zero beat with the output from bfo buffer-amplifier stage V12, when at 455 kc. The stage isolates the V14A detector, the V14B avc rectifier, and, for Radio Receivers R–483/FRR, R–320A/FRC, and R–274A/FRR, the V16B cathode follower loading from bfo V13. This stage also acts as a power amplifier to meet the load power requirements.

b. Screen voltage is applied (from terminal 7 of the terminal board E16) through the screen grid decoupling circuit (screen grid voltage-dropping resistor R100 and screen grid r-f bypass capacitor C135). Plate voltage is applied (from terminal 7 of E16) through the decoupling circuit (resistor R59 and capacitor C129B) and r-f choke L47. Capacitors C138 and C139 block the plate voltage from the stage load. Cathode selfbias is provided the stage by potentiometer R74, the BFO INJ control on the rear apron of the receiver.

c. The bfo oscillations at 455 kc ±3 kc, developed across L46, are fed through a shielded cable lead to the control grid of the 6BA6 tube used in the stage. The amplifier stage output at 455 kc ±3 kc and at the proper power level is parallel fed through C139 and C138, associated with the V14A detector and the V14B avc rectifier, respectively. In Radio Receivers R–483/FRR, R–320A/FRC, and R–274A/FRR, the stage output also is available through C145 (figs. 97 through 99) to the V16A cathode follower, but it has no use as such. L47 isolates the stage output to the stage load.

68. Detector V14A

(figs. 40 and 41)

a. Detector V14A functions to extract the original intelligence from the signal carrier tuned in. It is a diode type that provides a minimum of distortion that actually decreases with an increase in the input signal level. The d-c loading of V14A is the series combination of resistors R62, R63, R64, R65, potentiometer R69, and R102 (fig. 40). In figure 41, R102 is omitted and R69 is 3,300 ohms. Also, when AVC-MAN switch S8 is in the AVC position, the resistance of meter M1, in parallel with R69 and R102 (fig. 40 only), is part of the d-c load. The a-c loading of V14A, because of capacitors C141 and C142, is almost negligible, since each presents a high capacitive reactance at audio frequencies as compared to the effective resistance in parallel to them. The a-c loading of V14A, because of capacitor C143, is almost negligible, since the low capacitive reactance it presents at audio frequencies is in series with the high resistance of AUDIO GAIN control R84, and since both are in shunt with the low resistance presented by the series combination of R65, R69, and R102 (fig. 40 only). When LIMITER-OFF switch S6 is in the LIMITER position, the a-c loading of V14A, because of the low capacitive reactance of capacitor C144, is overcome by resistor R67 in series with C144. However, unless the noise actually impairs reception, the LIMITER-OFF switch should be placed in the OFF position.

b. Signal voltage at 455 kc from i-f driver stage V11 provides input to one of the diode sections of the 6AL5 tube used as the detector. The signal applied to V14A through capacitor C139 is across R62. The decoupling networks (resistor R63 and capacitor C141, and resistor R64 and capacitor C142) isolate the signal to R62. When the signal voltage across R62 is positive to ground, V14A

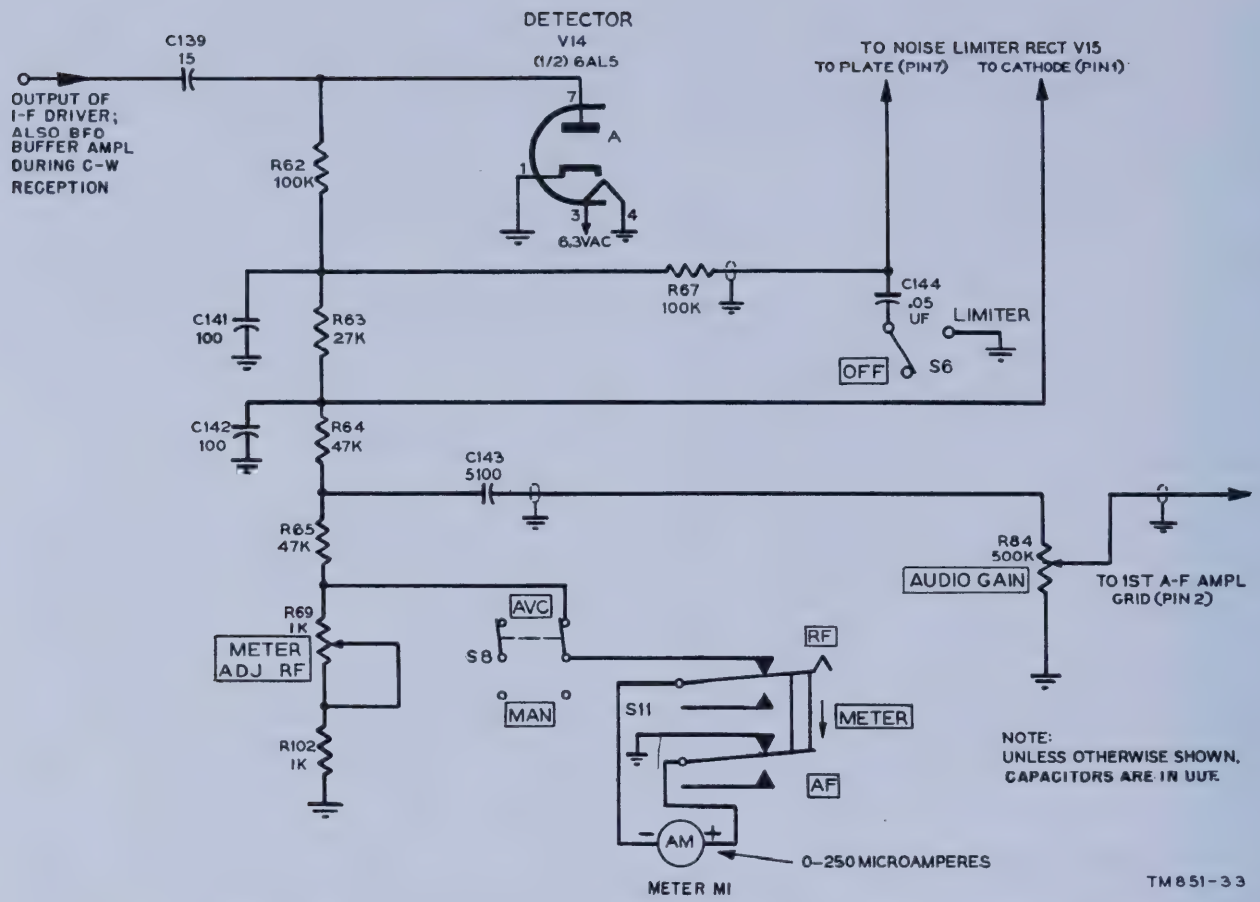

Figure 40. Radio Receivers R–483/FRR, R–274A/FRR, and R–320A/FRC, schematic diagram of detector.

conducts, causing a unidirectional current to flow through the d-c load in a direction so that the plate of V14A is negative in relation to ground. The a-c variations of the detected signal are coupled through capacitor C143 by a shielded lead to AUDIO GAIN control potentiometer R84, one end of which is grounded. The audio voltage between the movable arm of R84 and ground is the audio voltage input to first audio amplifier V16B.

c. The unidirectional current flow in R63, forming part of the d-c load of V14A, provides a negative bias for noise limiter rectifier V15A connected across it. The unidirectional current flow in METER ADJ RF potentiometer control R69 (part of the d-c load of V14A) provides for the control of the unidirectional current flowing through meter M1, to calibrate it.

d. When the detector input is derived from both i-f driver stage V11 and bfo buffer-amplifier stage V12, the unidirectional current variations are at the a-f difference between the 455-kc i-f driver and the 455-kc ±3 kc bfo buffer outputs. For frequency-shift reception, the i-f driver output is at 455 kc plus or minus—for example a carrier shift of 425 cps, so that the pitch of the two bfo resultant tones provides for the intelligence.

e. The DIODE OUTPUT terminal board E3 (fig. 41) provides for use of the receiver d-c output to operate recording equipment associated with the receiver. Also, when two receivers are connected for space diversity system use, the jumpered terminal at E3, when opened for one receiver, provides for the other receiver to develop the space diversity output (par. 4*d* and *e*). Radio Receiver R–320A/FRC, like Radio Receivers R–483A/FRR and R–274C/FRR, incorporates DIODE OUTPUT terminal board E3.

69. Cathode Follower V16A

(fig. 42)

a. Cathode follower V16A provides a 70-ohm match for equipment associated with the receiver. The low-impedance coaxial cable interconnection is used to keep to a minimum interfering voltage pickup, if any. That part of r-f autotransformer

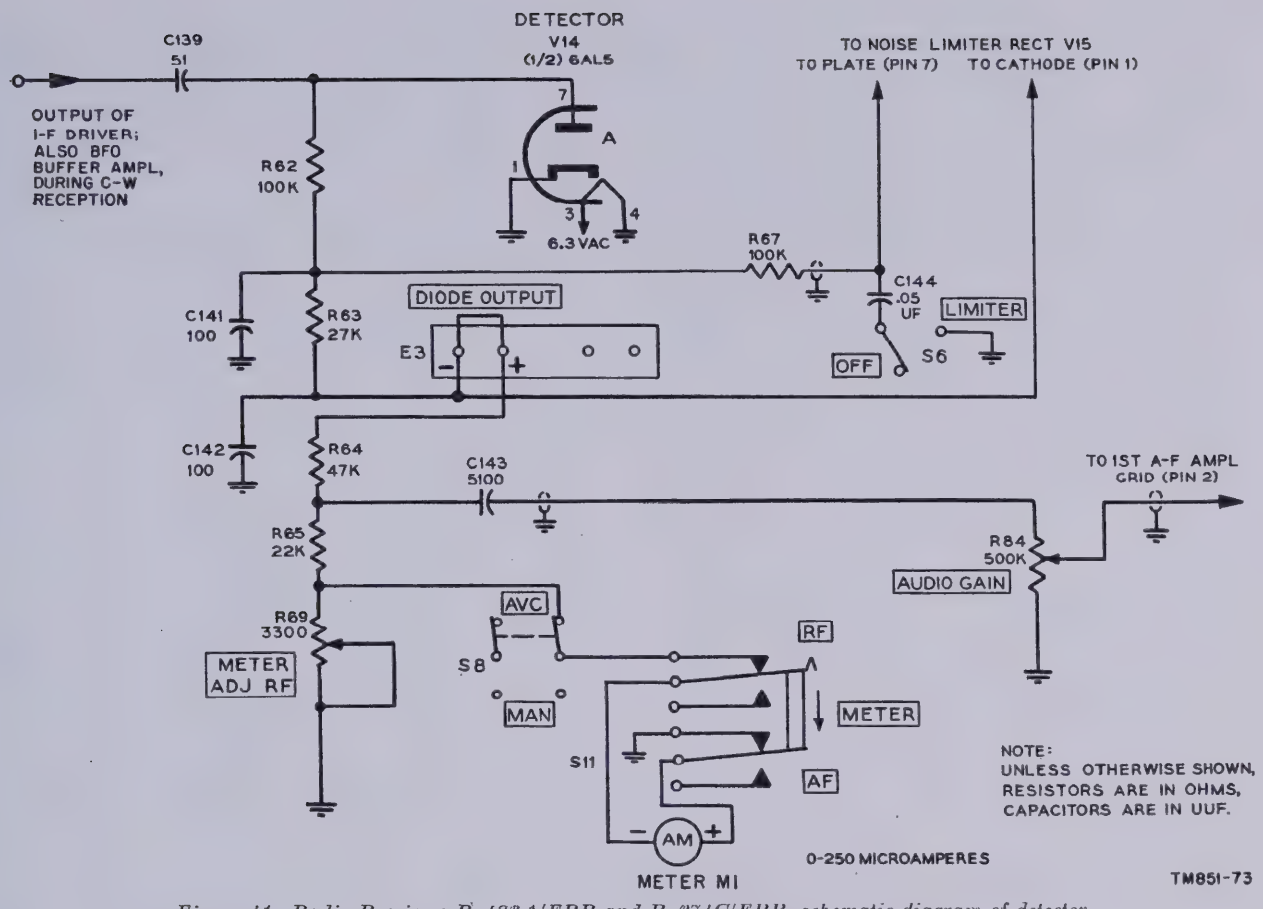

Figure 41. Radio Receivers R-483A/FRR and R-274C/FRR, schematic diagram of detector.

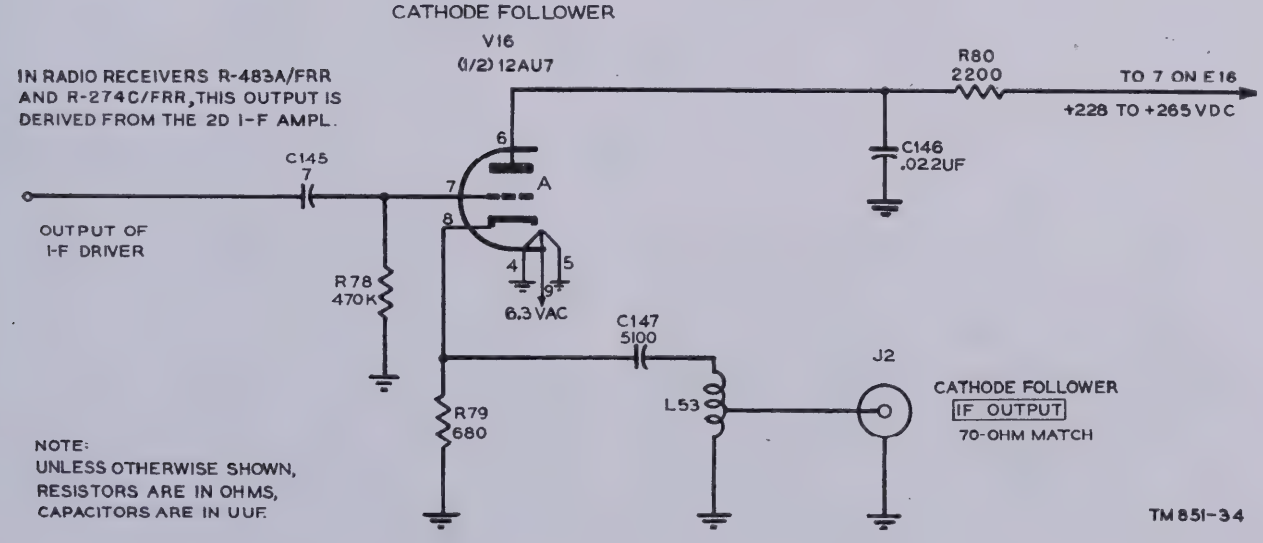

Figure 42. Radio Receiver, all types, schematic diagram of cathode follower.

L53 between its tap and ground provides the 70-ohm match at receptacle J2. Capacitor C147 blocks the d-c cathode current from L53 and from the load.

b. Plate voltage is applied (from terminal 7 of the terminal board E16) through plate voltage-dropping resistor R80. Self-bias is provided by cathode resistor R79, and capacitor C145 isolates the negative bias developed to the grid circuit.

c. Signal voltage at 455 kc from i-f driver stage V11 or from second i-f amplifier, as applicable, provides input to one of the triode sections of a 12AU7 tube used as the cathode follower. The signal input to the grid circuit of V16A is coupled through C145 across grid resistor R78. The signal output of V16A is between cathode and ground, since plate r-f bypass capacitor C146 effectively grounds the plate with regard to signal output. The signal output level is at a lower level than the signal input because of the negative feedback incorporated in the stage. With J2 terminated in its matching load, the stage provides i-f output at 455 kc through L53 to the load.

70. Avc Rectifier V14B

(figs. 43, 44, and 45)

a. Avc rectifier V14B is a diode type. When conducting, it develops a negative bias proportional to the signal carrier tuned in. It remains in a nonconducting state until the 455-kc signal input level to it from i-f driver V11 exceeds the delay bias provided across resistor R66 and the potential loss due to the resistance drop in the diode itself. In figure 43, the d-c loading of V14B consists of the series combination of resistors R61 and R66. The a-c loading of V14B consists of the resistor-capacitor combination of R60 and C140, the R-C (resistance-capacitance) time constant of which is high enough to smooth out any a-f variations in the negative bias developed across R61. In figures 44 and 45, the d-c and a-c loading of V14B are outlined in figure 43, but resistor R111 forms part of the d-c loading and R111 and capacitor C164 form part of the a-c loading. The R-C time constant resultant provides more effective avc action than that illustrated in figure 43. Also, after serial No. 487, capacitor C169 forms part of the a-c loading, and has a small effect on the R-C time constant. It is used to provide filter action in the avc line to E3. When MOD-CW switch S7 is in the CW position, capacitor C137 parallels C140 (fig. 43) or C164 (fig. 44), so that the time constant is increased enough to smooth out the lower a-f variations in the negative bias, developed when high-speed c-w signals are received. When AVC-MAN switch S8 is in the AVC position, the negative avc bias developed across R61 becomes available through S8 to the avc bus of the receiver. For the AVC position of S8, the resistor-capacitor

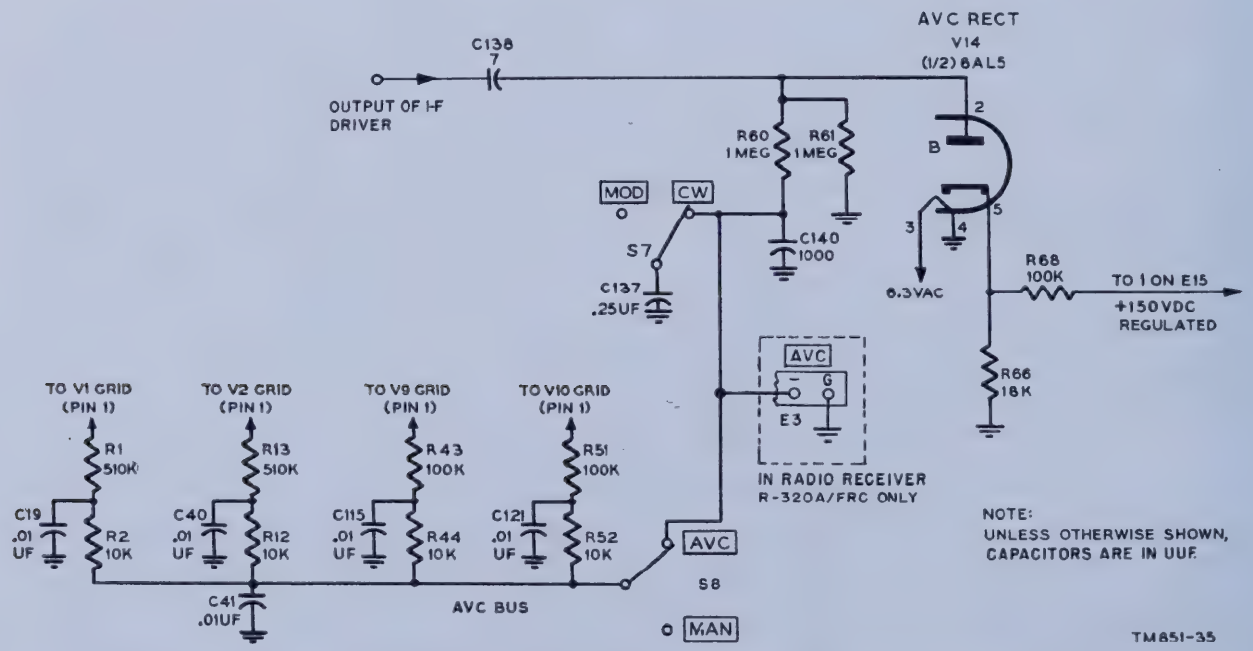

Figure 43. Radio Receivers R–483/FRR, R–320A/FRC, and R–274A/FRR, schematic diagram of avc rectifier.

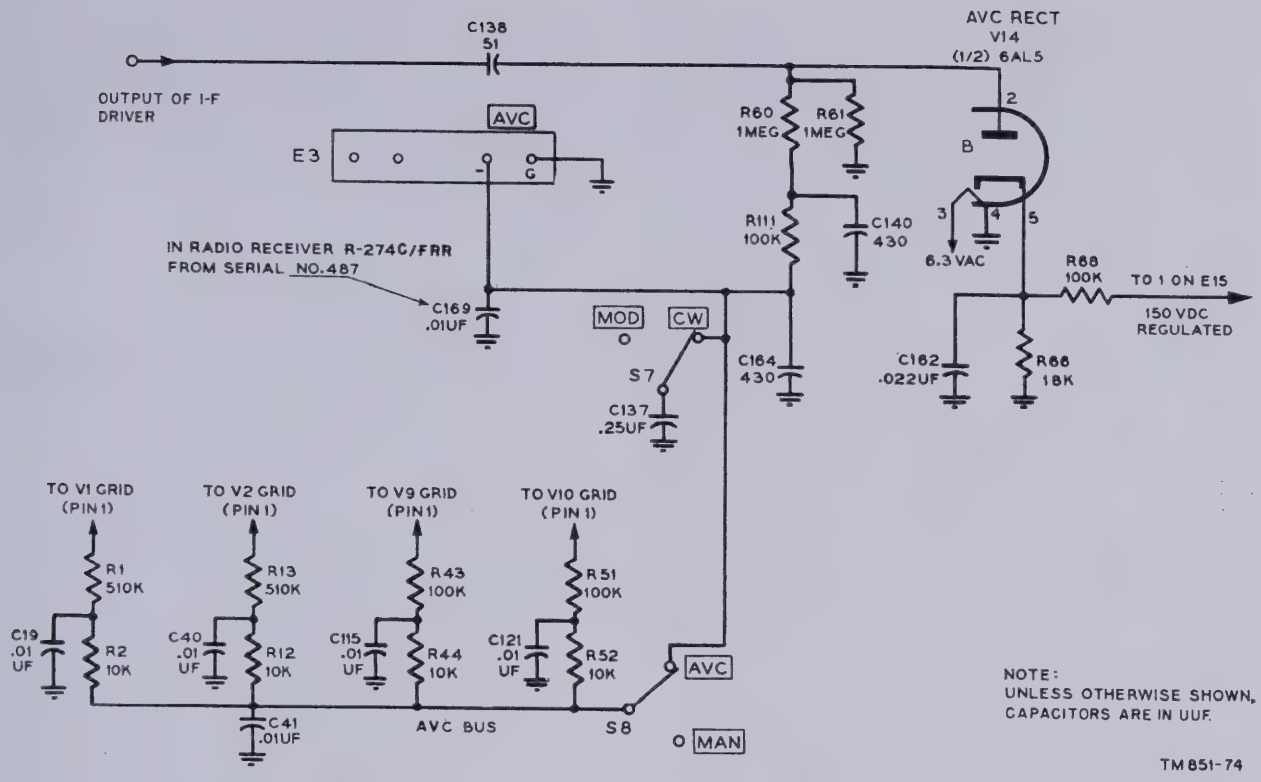

Figure 44. Radio Receivers R–483A/FRR and R–274C/FRR, through serial No. 1569, schematic diagram of avc rectifier.

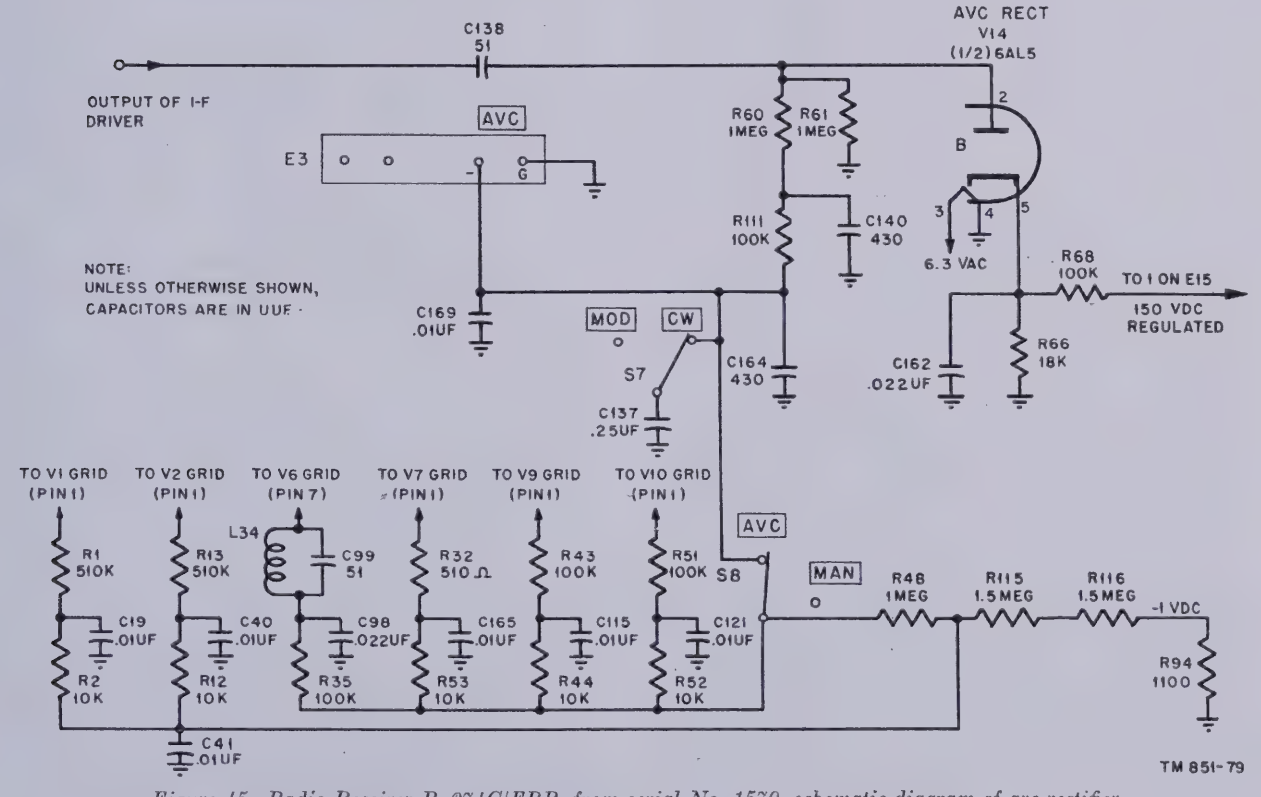

Figure 45. Radio Receiver R–274C/FRR, from serial No. 1570, schematic diagram of avc rectifier.

filter combinations R2 and C19 to the pin 1 grid of V1; R12 and R40 to the pin 1 grid of V2; R44 and C115 to the pin 1 grid of V9; R52 and C121 to the pin 1 grid of V10 also R35 and C98 (fig. 44) and R53 and C165 for Radio Receiver R–274C/FRR from serial No. 1570, increases the time constant of the avc bias voltage to their respective stages. R32 is the grid input resistance of V7 and the parallel resonant combination of L34 and C99 develops the grid input impedance of V6 (fig. 45).

b. Regulated B+ voltage provides for the avc negative delay bias used. Resistors R66 and R68 act as a voltage divider across the regulated B+ voltage source so that the cathode end of R66 is positive by the delay bias (+27 volts dc) with respect to ground. Capacitor C138 couples the signal from V11 and isolates the delay bias to V14B. Bypass capacitor C162 effectively grounds pin 5 cathode of V14B with regard to ac (figs. 44 and 45).

c. Signal voltage at 455 kc from the i-f driver stage (V11) provides input to one of the diode sections of the 6AL5 avc rectifier tube. The signal available to V14B is fed through C138 and developed across R61. When the signal strength exceeds the negative potential effective at the plate, V14B conducts. The unidirectional current flow resultant is such that the d-c potential drop across R61 is negative to ground. This d-c potential increases negatively with increase in signal strength so that when smoothed out and applied to V1, V2, V9, and V10 (figs. 43, 44, and 45) and also to V6 and V7 (fig. 45), it acts to reduce the gain of these stages, to maintain reasonably constant the a-f output of the receiver. In Radio Receiver R–274C/FRR, from serial No. 1570, resistors R48, R115, and R116 act as a voltage divider across the avc bus to the −1-volt d-c bias supply voltage so that the avc negative bias effective at V1 and V2 may be reduced. The avc nagative bias developed normally is taken from the screw terminal junction between R48 and R115 and from the screw terminal junction between R115 and R116 for the direction finder use of the receiver.

d. For keyed c-w reception, V14B is provided with input from i-f driver stage V11 and from bfo buffer amplifier stage V12; thus the function of V14B does not change in relation to that outlined in subparagraph *c* above. However, V12 is operative for the CW position of S7, and C137 parallels C140 (fig. 43) and C164 (fig. 44), as explained in *a* above.

e. In figures 44 and 45, the avc terminals on E3 provide for avc and common ground interconnections between receivers used in a space diversity system (par. 4*a*, *b*, *c*, and *d*). Radio Receiver R–320A/FRC, like Radio Receivers R–483A/FRR and R–274C/FRR, incorporates AVC terminal board E3.

71. Noise Limiter Rectifier V15A

(fig. 46)

a. Noise limiter rectifier V15A is a diode type. When S6 is in the LIMITER position and V15A conducts, capacitor C144 is virtually connected to the junction of resistors R63 and R64. Thus, the conduction of noise limiter rectifier V15A provides for a low-impedance path through C144 to ground. Since this path to ground is of a lower impedance than that through audio coupling capacitor C143, the audible noise and a-f signal are bypassed through C144 to ground.

b. The polarity of detector V14A output voltage developed across R63 makes the plate of V15A diode negative in relation to its cathode. Thus, in the absence of noise, V15A is the equivalent of an open circuit. When V15A is not conducting, noise limiter capacitor C144 charges to the average negative potential existent at the junction of R62 and R63 to ground. The time constant of resistor-capacitor combination R67 and C144 is such that the voltage across C144, because of its charge, follows the audio variations of the unidirectional potential. When the V14A detector output consists of unidirectional negative noise peaks to ground, the time constant, due to R67 and C144, cannot follow the rapid changes because of the noise peaks so that the voltage at the junction of R62 and R63 does not change for the intervals of each noise peak. However, the voltage at the junction of R63 and R64, to which the cathode of V15A is connected, does follow the sharp increase in negative voltage due to each noise peak, so that the cathode potential becomes more negative than the potential of the plate. This means that the plate is positive in relation to the cathode so that the noise limiter rectifier V15A conducts. When it does, C144 provides for the bypass noise limiter action, as explained in subparagraph *a* above for each noise peak interval.

72. First A-F Amplifier Stage V16B

(fig. 47)

a. First a-f amplifier stage V16B functions as a negative feedback a-f amplifier. The negative

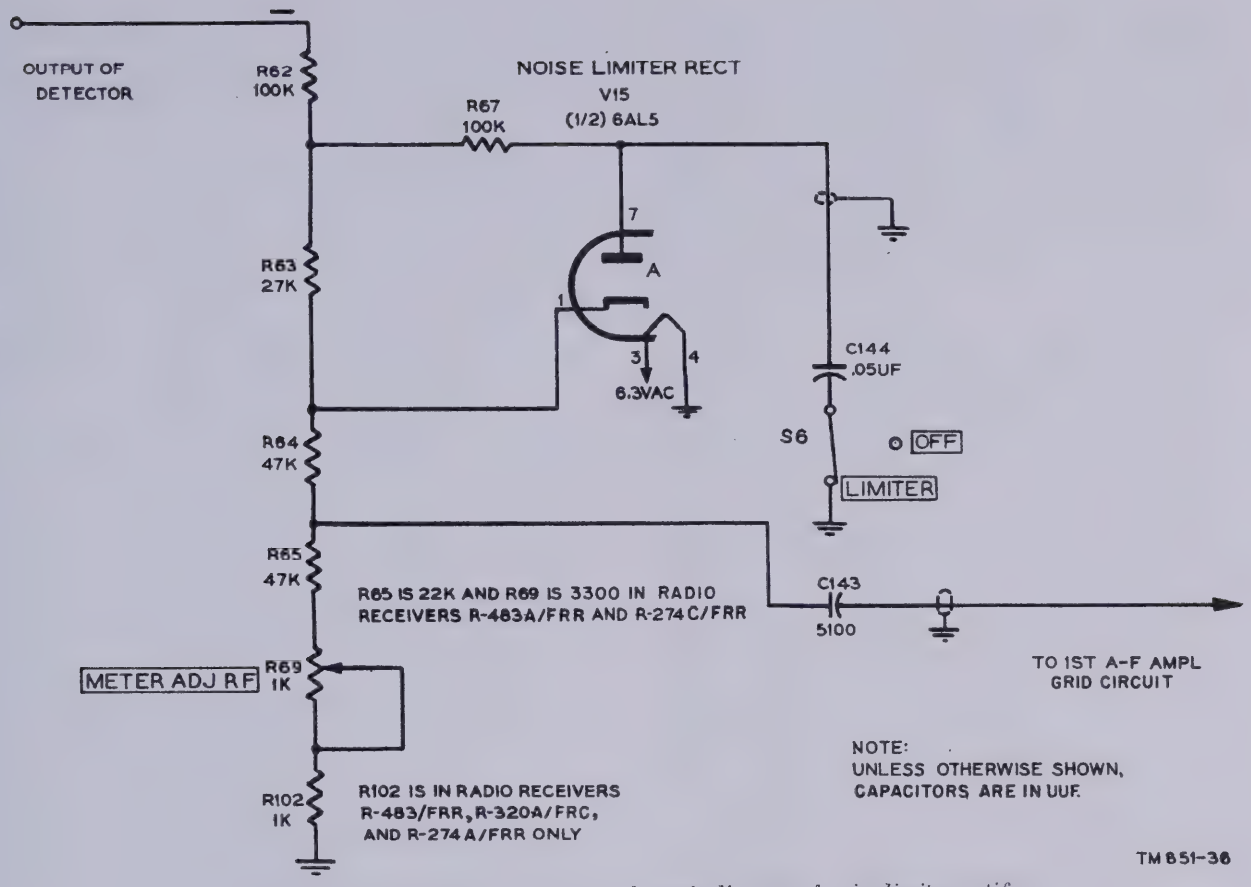

Figure 46. Radio Receiver, all types, schematic diagram of noise limiter rectifier.

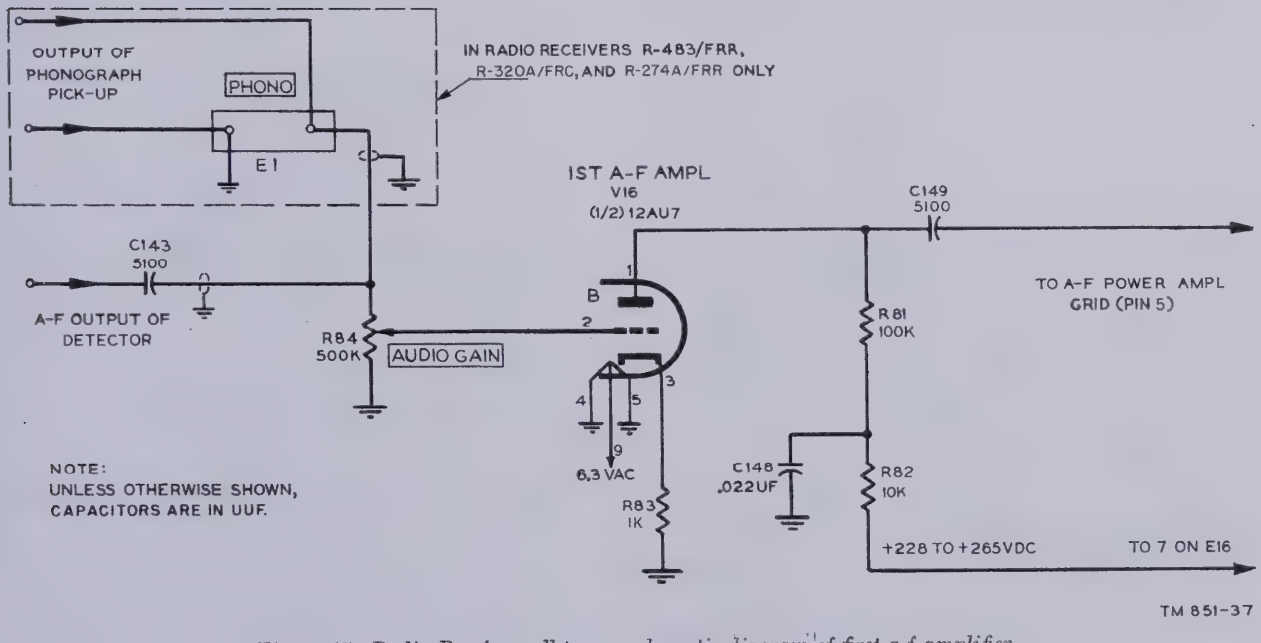

Figure 47. Radio Receiver, all types, schematic diagram of first a-f amplifier.

current feedback resulting from unbypassed cathode resistor R83 tends to maintain the stage more stable, increase the stage signal-to-noise ratio, and make the stage gain independent of frequency and tube replacement. The AUDIO GAIN control provides for the level control of the input to the stage. For Radio Receivers R–483/FRR, R–320A/FRC, and R–274A/FRR, the stage input may be from the output from a phonograph pickup when connected to PHONO terminal board E1.

b. Plate voltage is applied (from terminal 7 of terminal board E16) through the decoupling circuit (plate voltage-dropping resistor R82 and a-f bypass capacitor C148) and plate resistor R81. Capacitor C149 isolates the B+ supply voltage to the plate of V16 from the control grid of V17 and serves as the coupling capacitor. Self-bias is developed by the plate current flow in cathode resistor R83.

c. The unidirectional current variations, due to the detected signal output of V14A, are applied to the control grid circuit of one of the dual sections of a 12AU7 tube used in the stage. A shielded cable lead is used. Capacitor C143 isolates the unidirectional current from the grid, but the filter action it provides enables the unidirectional current a-c variations to develop the a-f signal across AUDIO GAIN control R84. The portion of the a-f signal voltage between the movable arm of R84 and ground is applied as input to the control grid of V16B. V16B amplifies the signal to that developed across R81 from which it is coupled to output stage V17 through capacitor C149.

73. A-F Power-Amplifier Stage V17

(fig. 48)

a. A-f power-amplifier stage V17 develops the a-f power output of the receiver. Power transformer T7 provides for loading the stage with a 600-ohm matching load or loudspeaker when connected to the AUDIO OUTPUT terminals of terminal board E2. T7 also provides for loading the stage with an 8,000-ohm matching headset when connected to PHONE jack J3. (This circuit will handle headsets ranging from 600 to 8,000 ohms impedance.) The two secondaries of T7 connected to E2 are of the balanced split type and are connected series aiding at E2 by a jumper. A common connection is used to provide a balanced output line. When the METER RF-AF switch is held depressed in the AF position (par. 74), meter M1 indicates the power delivered to the 600-ohm load.

b. Screen voltage is applied from terminal 7 of terminal board E16. Capacitor C161C of the B+ rectifier is the screen a-f bypass capacitor. Plate voltage is applied from the junction of a-f filter chokes L51 and L52 through the primary of T7. Capacitor C161B is the plate bypass capacitor. Self-bias is developed by d-c cathode current resistor R99. Capacitor C149 isolates the self-bias developed to the grid circuit of V17.

c. Signal voltage output from first a-f amplifier stage is coupled through C149 to the control grid

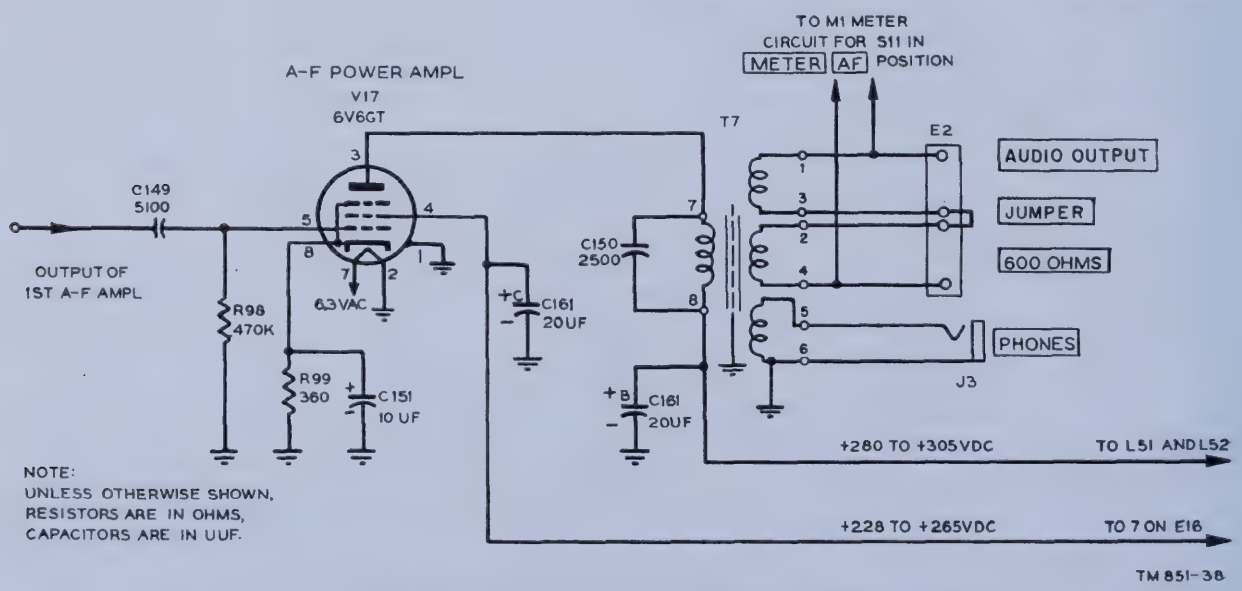

Figure 48. Radio receiver, all types, schematic diagram of a-f power amplifier.

of the 6V6GT tube used in this stage. The signal voltage input to the stage appears across d-c return resistor R98. The stage a-f signal power output is developed in the load connected to E2 and J3. Cathode bypass electrolytic capacitor C151 is large enough for the a-c component of cathode current, due to the signal, to flow through it rather than through R99. Capacitor C150 shunts the primary of T7 so that the spurious high h-f response output of the receiver, if any, does not appear at the load.

74. A-F Output Meter Rectifier V15B

(fig. 49)

a. A-f output meter rectifier V15B is rendered operative when METER RF-AF switch S11 is in the AF position. Then it rectifies the signal voltage, if any, across the 600-ohm AUDIO OUTPUT winding of power transformer T7. Unless terminal board E2 is provided with a suitable 600-ohm load, the signal voltage could be excessive enough for the unidirectional current flow through meter M1 to damage it. METER ADJ AF control R101 provides for the calibration adjustment of the current flow in M1. Resistor R70 limits the current flow.

b. The a-f signal voltage developed across the 600-ohm load causes the plate of V15B to become positive in relation to its cathode. The unidirectional current resultant flows through S11 in the AF position, meter M1, AUDIO OUTPUT winding of T7 shunted by the 600-ohm load, resistor R70, and part of R101 to complete the load circuit of V15B. Since the resistance of the load is much higher than the d-c resistance of the AUDIO OUTPUT winding of T7, most of the current flow is through the latter. The unidirectional current flow, being proportional to the a-f voltage developed by V15B, provides for meter M1 indication to be proportional to the a-f power output of the receiver.

75. Power Supply V18, V19, and V20

(fig. 50)

The self-contained power supply derives a-c power from a 25- to 60-cps or 50- to 60-cps, as applicable, 90- to 270-volt a-c line source. It provides the power to meet the various B+, bias, and a-c filament voltage requirements of the receiver. The T8 power transformer primary tap connection used is that whose designated voltage rating most closely approximates the voltage of the available a-c source. Connector P1 is used to connect the receiver to the a-c source. The RF GAIN control (R93 and S10), when turned in a clockwise direction from its OFF position, completes the primary circuit of T8 to the a-c source voltage. The primary of T8 should be fused by a slow-blow, 1.6-ampere, cartridge-type fuse F1, contained in a holder designated FUSE. The high-voltage secondary winding of T8 should be fused by a ⅜-ampere FUSE F2, pigtail or cartridge type, as applicable, connected between terminal 11 of T8 and ground. AC receptacle J5 parallels P1 to provide an a-c source outlet for a lamp or clock. Capacitors C152A and B or C152 and C168, as

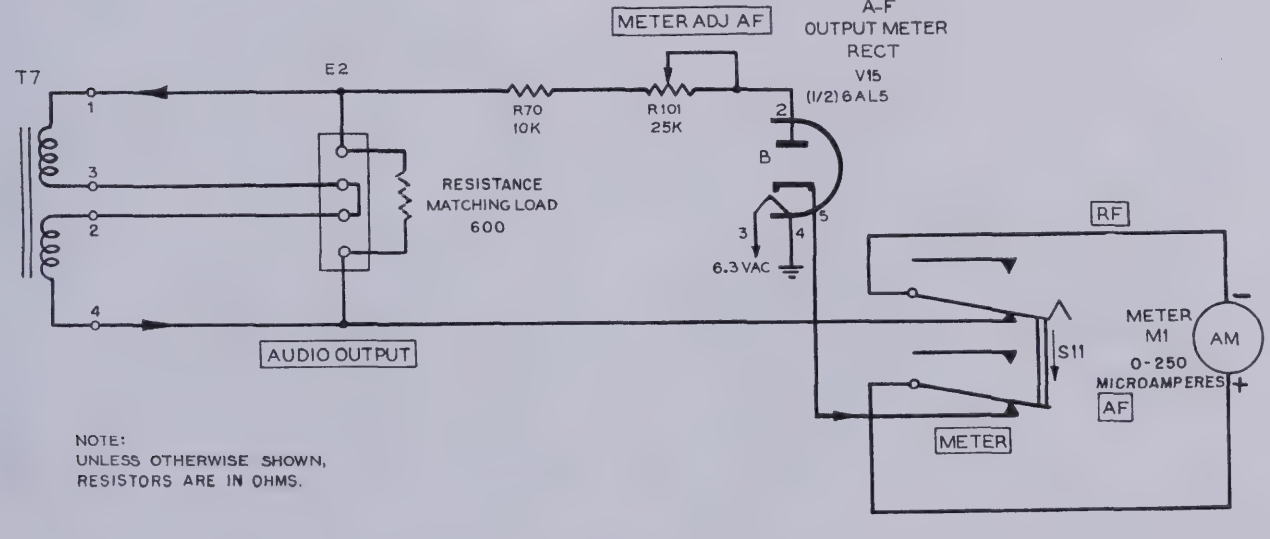

Figure 49. Radio Receiver, all types, schematic diagram of a-f output meter rectifier.

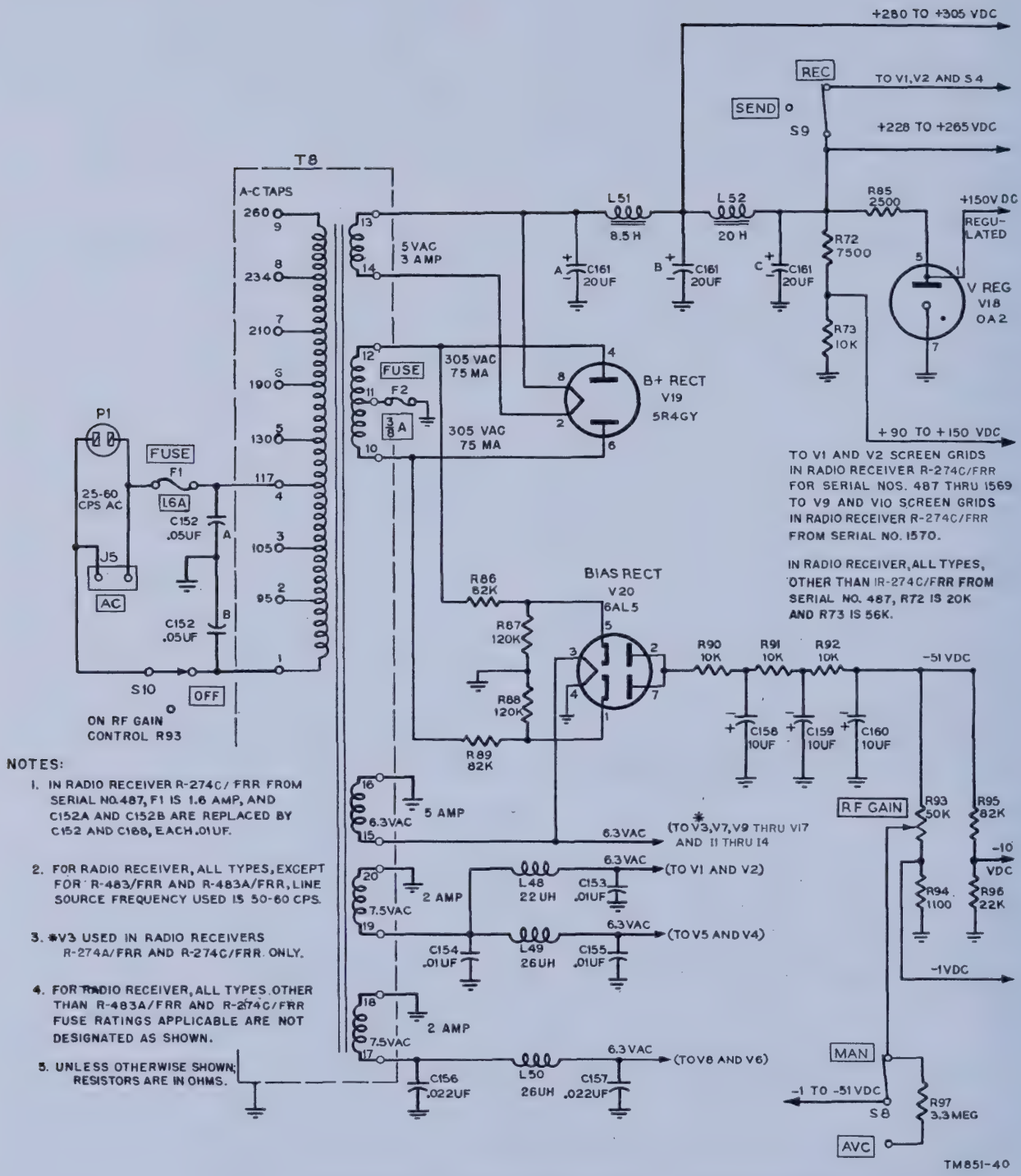

NOTES:

1. IN RADIO RECEIVER R-274C/FRR FROM SERIAL NO. 487, F1 IS 1.6 AMP, AND C152A AND C152B ARE REPLACED BY C152 AND C188, EACH .01 UF.
2. FOR RADIO RECEIVER, ALL TYPES, EXCEPT FOR R-483/FRR AND R-483A/FRR, LINE SOURCE FREQUENCY USED IS 50-60 CPS.
3. *V3 USED IN RADIO RECEIVERS R-274A/FRR AND R-274C/FRR ONLY.
4. FOR RADIO RECEIVER, ALL TYPES OTHER THAN R-483A/FRR AND R-274C/FRR FUSE RATINGS APPLICABLE ARE NOT DESIGNATED AS SHOWN.
5. UNLESS OTHERWISE SHOWN; RESISTORS ARE IN OHMS.

Figure 50. Radio Receiver, all types, schematic diagram of the power supply.

applicable, are included to bypass to ground any possible r-f interfering voltage that would otherwise be carried by the a-c source line to the receiver input circuit. T8 is inclosed completely in a grounded steel case to reduce the direct pickup of such interference.

a. B+ Rectifier. The a-c voltage developed across the secondary high-voltage winding of T8 is applied to the plates of full-wave B+ rectifier V19. A-c filament power is derived from the 5-volt a-c filament winding of T8. Each half-cycle of plate voltage applied provides for positive plate current flow to the B+ rectifier load. The a-c ripple voltage output of V19, due to the full-wave rectification, is bypassed to ground by low-pass filter reactor-capacitor sections L51 and C161B and L52 and C161C. The use of filter input capacitor C161A results in maximum d-c voltage output for the a-c plate voltage used. Resistors R72 and R73, in series, act as a bleeder to maintain the B+ rectifier d-c voltage regulation within reasonable limits when part of the B+ rectifier load is removed, as is the case when SEND-REC switch S9 is in the SEND position. V18 and its series resistor R85 form part of the B+ rectifier load. R85 is used to limit the current flow through V18. The d-c voltage drop across V18 to ground provides the stabilized +150-volt d-c supply voltage source of the receiver. The +228- to +265-volt d-c source is that across R72 and R73 in series to ground, and the +280- to +305-volt d-c source is taken from the junction of L51, L52, and C161B to ground. For Radio Receiver R–274C/FRR from serial No. 487, the +90- to +150-volt d-c source is taken from the junction of R72 and R73 to ground.

b. Bias Rectifier. The a-c voltage developed across the secondary high-voltage winding of T8 is applied partially to the cathodes of full-wave bias rectifier V20. A-c filament power is derived from the 6.3-volt a-c filament winding of T8. Each half cycle of cathode voltage applied provides for negative plate current flow to the bias rectifier load. Each of the resistor pairs, R86 and R87 and R89 and R88, acts as a voltage divider so that the high a-c voltage applied to each cathode of V20 is the required value. The a-c ripple voltage output of V20, due to the full-wave rectification, is bypassed to ground by low-pass filter resistor-capacitor sections R90 and C158, R91 and C159, and R92 and C160. Resistors R95 and R96 in series act as a voltage divider across the −51 volts dc provided by the bias rectifier. The d-c voltage developed across R96 provides the −10-volt d-c bias voltage supply of the receiver. In Radio Receivers R–483A/FRR and R–274C/FRR, resistors R56, R57, and R113 at pin 1 of V11 provide for a −7.8 volt d-c tap of the −10-volt d-c supply. Likewise, the RF GAIN control (R93) and resistor R94, in series, act as a voltage divider, so that the d-c voltage across R94 provides the −1-volt d-c bias voltage supply. The movable arm of R93, for either position of AVC-MAN switch S8, provides for d-c bias supply which is continuously variable from −1 to −51 d-c volts. When S8 is in the AVC position, resistor R97 is in series with the movable arm of R93 to isolate the avc bias to the avc bus.

c. A-C Filament Supply. The a-c filament supply requirements of the receiver are developed in the four secondary filament windings of T8. Of these, the 5-volt a-c filament winding provides the a-c filament power for V19. The 6.3-volt a-c filament winding provides the a-c filament power for V20 and for receiver pilot lamps I 1, I 2, I 3, I 4, and receiver tubes V7 through V17; and for V3 in Radio Receivers R–274A/FRR and R274C/FRR. One of the two 7.5-volt a-c filament windings provides a-c filament power for receiver tubes V1, V2, V4, and V5, and the other does the same for V6 and V8. Each of the 7.5-volt a-c filament windings provides for 6.3 volts ac. This is because of the a-c voltage drop in r-f chokes L48 and L49 associated with one winding and the a-c voltage drop in the r-f choke L50 associated with the other winding. The r-f filter networks choke (I48 and capacitors C153 and C154, and choke L49 and capacitors C154 and C155, respectively) decouple the 7.5-volt a-c filament winding from V1 and V2 and from V4 and V5 with regard to any r-f interference that appears at the input or output terminals of each. The r-f filter network (choke L50 and capacitors C156 and C157) does the same for V6 and V8 with regard to the other 7.5-volt a-c filament winding.

CHAPTER 5

FIELD MAINTENANCE INSTRUCTIONS

Note.—This chapter contains information for field maintenance. The amount of repair that can be performed by units having field maintenance responsibility is limited only by the tools and test equipment available, and by the skill of the repairman.

Section I. TROUBLESHOOTING AT FIELD MAINTENANCE LEVEL

Caution: When servicing the radio receiver with the a-c power turned on, be extremely careful of any high voltages exposed. Keep one hand in the pocket when making any voltage measurement. With the a-c power turned off, before touching any part, short the part to ground.

76. Troubleshooting Procedures

The first step in servicing a defective radio set is to sectionalize the fault. Sectionalization means tracing the fault to the *major component or circuit* responsible for the abnormal operation of the set. The second step is to localize the fault. Localization means tracing the fault to the defective *part* responsible for the abnormal condition. Some faults such as burned-out resistors and shorted transformers often can be located by sight, smell, and hearing. The majority of faults, however, must be localized by *checking voltage and resistance.*

a. System Sectionalization. System sectionalization is discussed in paragraph 50.

b. Component Sectionalization and Localization. The tests listed below aid in isolating the source of trouble. To be effective, the procedure should be followed in the order given. Remember that the servicing procedure should cause no further damage to the receiver. First, trouble should be localized to a single stage or circuit. Then the trouble may be isolated within that stage or circuit by appropriate voltage, resistance, and continuity measurements. The service procedure is summarized as follows:

(1) *Visual inspection.* The purpose of visual inspection is to locate any visible trouble. Through this inspection alone, the repairman may frequently discover the trouble, or determine the stage in which the trouble exists. This inspection is valuable in avoiding additional damage to the receiver that might occur through improper servicing methods and in forestalling future failures.

(2) *Resistance measurements of B+ and bias circuits.* These measurements (par. 80) prevent further damage to the receiver from possible short circuits. Since this test gives an indication of the condition of the filter circuits, its function is more than preventive.

(3) *Operational test.* The operational test (par. 81) is important because it frequently indicates the general location of trouble. In many instances the information gained will determine the exact nature of the fault. To utilize this information fully, all symptoms must be interpreted in relation to one another.

(4) *Troubleshooting chart.* The trouble symptoms listed in this chart (par. 82) will aid greatly in localizing trouble.

(5) *Signal substitution.* The principal advantage of the signal substitution method (par. 85) is that it usually enables the repairman to localize a trouble accurately and quickly to a given stage when the general location of the trouble is not immediately evident from the tests above.

(6) *Stage gain charts.* These charts (par. 89) can be used to localize obscure, hard-to-find troubles.

(7) *Intermittents.* In all these tests the possibility of intermittents should not be overlooked. If present, this type of trouble often may be made to appear by tapping or jarring the set. It is possible that the trouble is not in the receiver itself but in the installation. In this event, test the installation, if possible.

77. Troubleshooting Data

Take advantage of the material supplied in this manual. It will help in the rapid location of faults. Consult the following troubleshooting data:

Fig.	Description
97	Radio Receiver R–483/FRR, schematic diagram.
98	Radio Receiver R–320A/FRC, schematic diagram.
99	Radio Receiver R–274A/FRR, schematic diagram.
100	Radio Receiver R–274C/FRR, from serial No. 1 through 486, and Radio Receiver R–483A/FRR, schematic diagram.
101	Radio Receiver R–274C/FRR, from serial No. 487 through 1569, schematic diagram.
102	Radio Receiver R–274C/FRR, from serial No. 1570, schematic diagram.
51	Radio Receiver R–320A/FRC, R–483/FRR, and variable frequency operation of R–274A/FRR, tube socket voltage and resistance diagram.
52	Radio Receivers R–483A/FRR and variable frequency operation of R–274C/FRR, from serial No. 1 through 486, tube socket voltage and resistance diagram.
53	Radio Receiver R–274C/FRR, from serial No. 487 through 1569, variable frequency operation, tube socket voltage and resistance diagram.
54	Radio Receiver R–274C/FRR, from serial No. 1570, variable frequency operation, tube socket voltage and resistance diagram.
55	Radio Receiver R–274A/FRR, tube socket voltage and resistance diagram for crystal control positions 1 through 6.
56	Radio Receiver R–274C/FRR, from serial No. 1 through 486, tube socket voltage and resistance diagram for crystal control positions 1 through 6.
57	Radio Receiver R–274C/FRR, from serial No. 487 through 1569, tube socket voltage and resistance diagram for crystal positions 1 through 6.
58	Radio Receiver R–274C/FRR, from serial No. 1570, tube socket voltage and resistance diagram for crystal positions 1 through 6.
59	Radio Receivers R–483/FRR, R–320A/FRC, and R–274A/FRR, resistor-capacitor board, voltage and resistance diagram.
60	Radio Receiver R–483A/FRR, and Radio Receiver R–274C/FRR, from serial No. 1 through 486, resistor-capacitor board, voltage and resistance diagram.
61	Radio Receiver R–274C/FRR, from serial No. 487 through 1569, resistor-capacitor board, voltage and resistance diagram.
62	Radio Receiver R–274C/FRR, from serial No. 1570, resistor-capacitor board, voltage and resistance diagram.
Par.	
83	D-c resistances of transformers and coils.
Fig.	
71	Radio receiver, all types other than R–274C/FRR, from serial No. 487 through 1569, B+ voltage distribution.
72	Radio Receiver R–274C/FRR, from serial No. 487 through 1569, B+ voltage distribution.
73	Radio receiver, all types other than R–274C/FRR and R–483A/FRR, avc and bias voltage distribution.
74	Radio Receivers R–274C/FRR and R–483A/FRR, from serial No. 1 through 1569, avc and bias voltage distribution.
75	Radio Receiver R–274C/FRR, from serial No. 1570, avc and bias voltage distribution.
76	Radio receiver, all types, antenna r-f tuner subassemblies for bands 1 through 6.
77	Radio receiver, all types, interstage r-f tuner subassemblies for bands 1 through 6.
78	Radio receiver, all types, oscillator r-f tuner subassemblies for bands 1 through 6.
79	Radio receiver, all types, 3,955-kc i-f transformer subassembly T2.
80	Radio receiver, all types, i-f filter circuit transformer subassembly T3.
81	Radio receivers, all types, i-f transformer subassembly T4 (or T5).
82	Radio receiver, all types, bfo subassembly T6.
83	Radio receiver, all types, 3.5-mc crystal oscillator subassembly T9.
84	Radio Receivers R–274A/FRR and R–274C/FRR, frequency control unit, internal view, shield cover removed.
85	Radio receiver, all types, first mixer i-f transformer subassembly T1.
86	Radio receiver, all types, r-f strip subassembly, exploded view.
87	Radio receiver, all types, SELECTIVITY switch subassembly.
88	Radio receiver, all types, switch base, locating template.
89	Radio receiver, all types, tuning unit assembly, ready for replacement, apart from switch S3 shield, as applicable.
90	Radio receiver, all types, gear-train assembly, exploded view.
91	Radio receiver, all types, main tuning capacitor, drive link and spring assembly.
95	Resistor color and letter code.
96	Capacitor color and letter codes.

78. Test Equipment Required for Troubleshooting

The test equipment required for troubleshooting the radio receiver is listed below. The technical manuals associated with the test equipment also are listed.

Test Equipment	Technical Manual
RF Signal Generator Set AN/URM–25B	
Output Meter TS–585A/U	TM 11–5017.
Audio Oscillator TS–382A/U	TM 11–2684A.
Electronic Multimeter ME–6A/U	
Oscilloscope OS–8A/U	
Tube Tester TV–2/U	
Multimeter TS–352/U	TM 11–5527.
Signal Generator TS–465/U	TM 11–2642.
Adapter Kit Navy Type 49992	Navy Stock No. F16–B–86231–9031.
.01-μf capacitor	Stock No. 3DKA10–214.
.1-μf capacitor	Stock No. 3DA100–16.
100-ohm carbon resistor	

79. General Precautions

Whenever the radio receiver is serviced, observe the following precautions very carefully:

a. Wear goggles to protect the eyes from dust when using compressed, dry, filtered air to blow out the receiver.

b. Choose the power transformer primary tap that has a voltage rating closest in agreement with the a-c source voltage.

c. Maintain the proper fuse to prevent damage.

d. In an emergency, turn off the receiver by pulling the receiver power cord plug from the a-c power source.

e. When the receiver power has been turned on, do not switch it off and on again. This may cause the ⅜-ampere pigtail or cartridge type fuze (as applicable) to blow because of the excessive initial filter capacitor charging current.

f. Never depress the Meter RF-AF switch unless the 600-ohm or the loudspeaker audio output is very low. Otherwise, the meter may be damaged.

g. Turn the receiver off when changing tubes. Wear gloves to prevent severe burns when removing *hot* tubes.

h. Careless replacement of parts often makes new faults inevitable. Note the following points:

(1) Before a part is unsoldered, note the position of the leads. If the part, such as a transformer, has a number of connections, tag each of the leads to it.

(2) Be careful not to damage other leads by pulling or pushing them out of the way.

(3) Do not allow drops of solder to fall into the set; they may cause short circuits.

(4) A carelessly soldered connection may create a new fault. Since a poorly soldered joint is one of the most difficult faults to find, it is important to make well-soldered joints.

(5) When a part is replaced in r-f or i-f circuits, it must duplicate the placement of the original part. A part that has the same electrical values but different physical size may cause trouble in high-frequency circuits. Give particular attention to proper grounding when replacing a part. Use the same ground as in the original wiring. Failure to observe these precautions may result in decreased gain or, possibly, in oscillation of the circuit.

(6) Do not disturb the adjustment of any of the adjustable tuning cores in the r-f coil forms, the trimmer capacitors, and the METER ADJ RF or the METER ADJ AF control.

80. Checking Bias and B+ Circuits for Shorts

Trouble within the receiver often may be detected by checking the resistance of the bias and high-voltage circuits before applying power to the receiver. Make the following chart checks before attempting to put the receiver in operation. Doing so also prevents the needless overload blowing of the receiver self-contained power supply FUSE F1 or F2. All readings are between the points indicated and chassis ground.

Step	Action	Resistance check to chassis from	Normal (ohms)	Abnormal (ohms)	Possible cause of fault
1	Remove V19	Pins 2 and 8 of V19.	46K; 15.8 K in Radio Receiver R–274C/FRR only, from serial No. 487.	0	Short due to C161A.
				650 or less	Short due to C23, C109, C161B, or C161C. For Radio Receiver R–274A/FRR or R–274C/FRR only, shorted C61. For Radio Receiver R–274C/FRR only, shorted C163; or C165 from serial No. 487 through 1569.
				3200; 2200 in Radio Receiver R–274C/FRR only, from serial No. 487.	Short due to C72 or C73. For Radio Receiver R–274C/FRR only from serial No. 487, shorted C167.
				3200 to 46K; 2200 to 15.8K in Radio Receiver R–274C/FRR only, from serial No. 487.	Leakage caused by any of these capacitors or plate or screen grid bypass capacitors, apart from Radio Receivers R–274C/FRR and R–483A/FRR. Use SEND-REC switch S9, conversion switch S4 (BAND CHANGE switch), MOD-CW switch S7, and also VFO-XTALS switch (S2, S3) of Radio Receivers R–274A/FRR and R–274C/FRR, to isolate the defective capacitor to a smaller grouping of capacitors for more rapid identification.
2		Pin 4 or 6 of V19.	55; 41 in Radio Receiver R–274C/FRR, from serial No. 1570.	0 or low	Short due to plate winding of T8.
3	Replace V19. Remove V20. Switch AVC-MAN switch to AVC, and set RF GAIN control to its minimum control position.	Pin 2 or 7 of X20.	65K	Low	Short or leakage due to C98, C127, C128, C158, C159, or C160. Also C100 for all receivers, apart from Radio Receivers R–274C/FRR and R–483A/FRR; also C165 for Radio Receiver R–274C/FRR from serial No. 1570.
		Primary of T8	Infinite	0	Short due to C152A and C152B, but C152 and C168 for Radio Receiver R–274C/FRR from serial No. 487.
				Low	Leakage due to C152A or C152B; or C152 or C168, as applicable.

81. Operational Test

If the radio receiver is connected to its associated components as in normal operation, operate the equipment as described in the equipment performance checklist (par. 52). This checklist is important because it frequently indicates the general location of trouble. Check the radio receiver for smoke and the odor of burned or overheated parts.

82. Troubleshooting Chart

The following chart is supplied as an aid in locating trouble in the radio receiver. This chart lists the symptoms which the repairman observes, either visually or audibly, while making a few simple tests. *The chart also indicates how to localize trouble quickly to the audio, the i-f, or the r-f stages of the receiver.* The signal substitution tests described in paragraphs 86, 87, and 88 can be used to supplement this procedure and to determine the defective stage. Once the trouble has been localized to a stage or circuit, a tube check and voltage and resistance measurements of the stage or circuit ordinarily should be sufficient to isolate the defective part. Normal voltage and resistance measurements, as applicable, are given in figures 51 through 62. For the location of parts, refer to figures 63 through 75.

Symptom	Probable trouble	Correction
1. RF GAIN switch in on position. Receiver fails to operate and dial lamps do not light.	Open FUSE F1	Replace fuse. If it blows again, check r-f bypass capacitors C152A, B; or C152 and C168 for Radio Receiver R–274C/FRR from serial No. 487.
	Connecting leads to fuse holder broken.	Repair leads.
2. Receiver fails to operate but dial lamps light up.	Open FUSE F2	Replace fuse. If it blows again, check filter capacitors C158, C159, C160, and C161A, B, and C.
3. No receiver output. With AVC-MAN switch at AVC; with RF GAIN control and IF GAIN control for Radio Receiver R–320A/FRC full on, meter M1 dips and rises as TUNING control is rotated to resonate receiver signals.	Defect exists between the i-f driver V11 and the AUDIO OUTPUT terminals.	Use headphones, with .1-μf capacitor in series with one lead across grid and plate circuits of audio stages V17 and V16B to localize defective stage. Test tube in the stage and then, if necessary, make voltage and resistance measurements to locate defective part. An alternative method is to use signal substitution in audio stages (par. 85.)
4. Receiver output. With AVC-MAN switch at AVC, and RF GAIN control and IF GAIN controls for Radio Receiver R–320A/FRC full on, meter M1 provides no indication as TUNING control is rotated to resonate receiver signals.	Defect in meter M1 RF circuit.	Check METER RF-AF switch S11, potentiometer R69 resistor R102, as applicable, for shorts, and the meter M1.
5. Receiver output. With LIMITER-OFF switch S6 in its LIMITER position, receiver noise input, such as that due to ignition systems, is not eliminated from the receiver output.	Defect in V15A, noise limiter circuit.	Replace tube V15. Make resistance measurements from pins 1 and 7 of V15 to locate defective part.
6. Receiver inoperative. Meter M1 does not deflect as receiver is tuned. Pilot lamps light up.	Failure of B+ supply	Compare voltages measured from each of terminals 8 and 11 of receiver terminal strip E17 to chassis with values shown (figs. 59 through 62.) If no B+ voltages are present, check tubes V18, V19, V20 in receiver power supply. If voltage is only +15 v at the terminal 8, FUSE F2 is blown. Replace fuse. If it blows again follow the procedure outlined (par. 80).
	Defect exixts between antenna input connector J1 and the V14A detector stage.	See symptoms 7 and 8 below.

Symptom	Probable trouble	Correction
7. A-f circuits satisfactory but no receiver output is obtained when modulated 455-kc i-f signal is applied through a .01-μf series capacitor to the pin 7 grid of the first mixer V5, with BAND CHANGE control switched for single conversion.	Faulty 455-kc i-f or first mixer stage.	Use signal substitution in 455-kc i-f stages V11, V10, V9, and V7, and first mixer stage V5 (par. 87*a*, *c*, *d*, and *e*) to locate defective stage. Test tube in this stage and then, if necessary, make voltage and resistance measurements to locate defective part.
8. A-f and 455-kc i-f circuits satisfactory but no receiver output is obtained when modulated 3,955-kc i-f signal is applied through a .01-μf series capacitor to the pin 7 grid of the first mixer V5 with BAND CHANGE control switched for double conversion.	Faulty second mixer stage or 3.5-mc crystal oscillator.	Use signal substitution in 3,955-kc i-f stages (par. 87*g* and *h*) to locate defective stage and then, if necessary, make voltage and resistance measurements to locate defective part.
9. A-f and i-f circuits satisfactory but no output is obtained when r-f modulated signal is applied to antenna input connector J1, and receiver is tuned to this signal.	Faulty r-f stage	Use signal substitution in r-f stages (par. 88) to locate defective stage and then, if necessary, make voltage and resistance measurements to locate defective part.
10. A-f and i-f circuits satisfactory but output is obtained on less than the six frequency bands of the receiver when r-f modulated signal is applied to antenna input connector J1, and receiver is tuned to input signal providing output.	Fault in r-f tuner subassembly of the receiver frequency bands which provide no output.	Remove each stage r-f tuner subassembly, in turn, replacing each, in turn, with its counterpart known to be good; then check to locate the defective part in each.
11. A-m signals received but no beat note obtained when MOD-CW switch is on CW. Beat note heard when 455-kc i-f c-w signal is applied to pin 5 of V11.	Defective bfo V13 or bfo buffer amlifier v 12.	Test V12 and V13 and then, if necessary, make voltage and resistance measurements to locate defective part.
12. A-m signals received but no receiver i-f output across the 70-ohm resistive load connected to the IF OUTPUT Connector J2.	Defective cathode follower V16A stage.	Test V16, and then, if necessary, make voltage and resistance measurements to locate defective part.
13. In the instance of the Radio Receiver R–274A/FRR and R–274C/FRR, a-m signals received with the XTALS switch S2, S3, in its vfo position, but no a-m signals received with S2, S3, in its 1, 2, 3, 4, 5, or 6 crystal position.	Defective h-f crystal oscillator V3.	Test V3, and then the crystal in the frequency control unit crystal holder selected. Then, if necessary, make voltage and resistance measurements to locate defective part.
14. Reception weak. With no signal tuned in, roaring noise is not heard when AUDIO GAIN and RF GAIN control and IF GAIN control for the Radio Receiver R–320A/FRC are turned to maximum setting, and SELECTIVITY switch S5A, B, C is in one of its three NON-XTAL positions. With signal tuned in, meter M1 does not rise to customary peaks for reception of known stations.	Weak tubes Low plate or screen voltage due to shorted capacitor in plate or screen return circuit. Receiver not properly alined.	Check tubes. Check voltage and make resistance checks. Realine receiver.
15. Reception distorted	Open grid resistor or leaky capacitor in audio circuits.	Use headset, with .1-μf capacitor in series with one lead, to localize faulty stage. Check grid circuits of V17 and V16B.

Symptom	Probable trouble	Correction
16. Noisy and fluctuating reception on any one of the six frequency bands of the receiver.	Faulty gain controls	Check AUDIO GAIN and RF GAIN controls, and IF GAIN control in the instance of the Radio Receiver R–320A/FRC.
	Faulty antenna circuit	Check antenna installation for loose connections. Check the pin contacts of the S1A section of the BAND CHANGE switch, on the antenna r-f tuner subassembly for each band, for looseness.
17. Objectionable hum in output	Open filter capacitors in power supply of receiver.	Check C161A, B, C, by connecting new equivalent capacitor for each in turn until hum in output is no longer evident. Do likewise with regard to C158, C159, and C160. (Note polarity.)
	Shorted turns in filter chokes in power supply of receiver.	Check for shorted turns by measuring resistance of L51 and L52. L51 should be 150 ohms; L52, 354 ohms.
	Short between winding and core in filter chokes.	Check for open circuit between either filter choke terminal and filter case, for each filter choke; if circuit is not open replace choke involved.
18. Intermittent	Defective tube, resistor, or capacitor.	With an insulated prod, gently tap and slightly move all tubes, resistors, capacitors, and soldered connections to locate loose elements in tubes or loose connection to any component.
19. Oscillation (indicated by whistle or howl).	Defective tube, poor shielding, or high-resistance soldered chassis return, or open bypass capacitors.	Check tubes, and shunt bypass capacitors with duplicate capacitors of equal value.

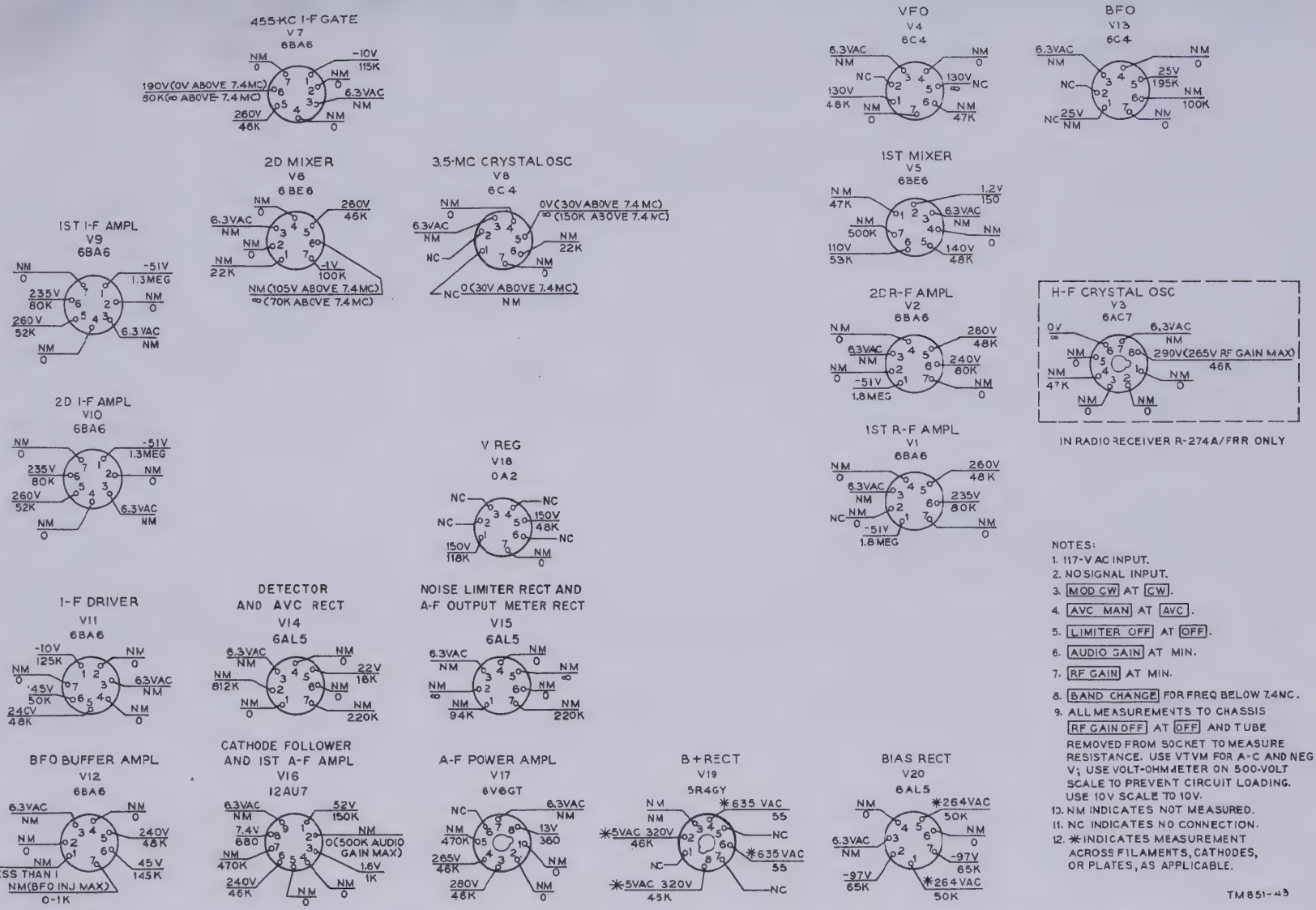

Figure 51. Radio Receivers R-320A/FRC, R-483/FRR, and variable frequency operation of R-274A/FRR, tube socket voltage and resistance diagram.

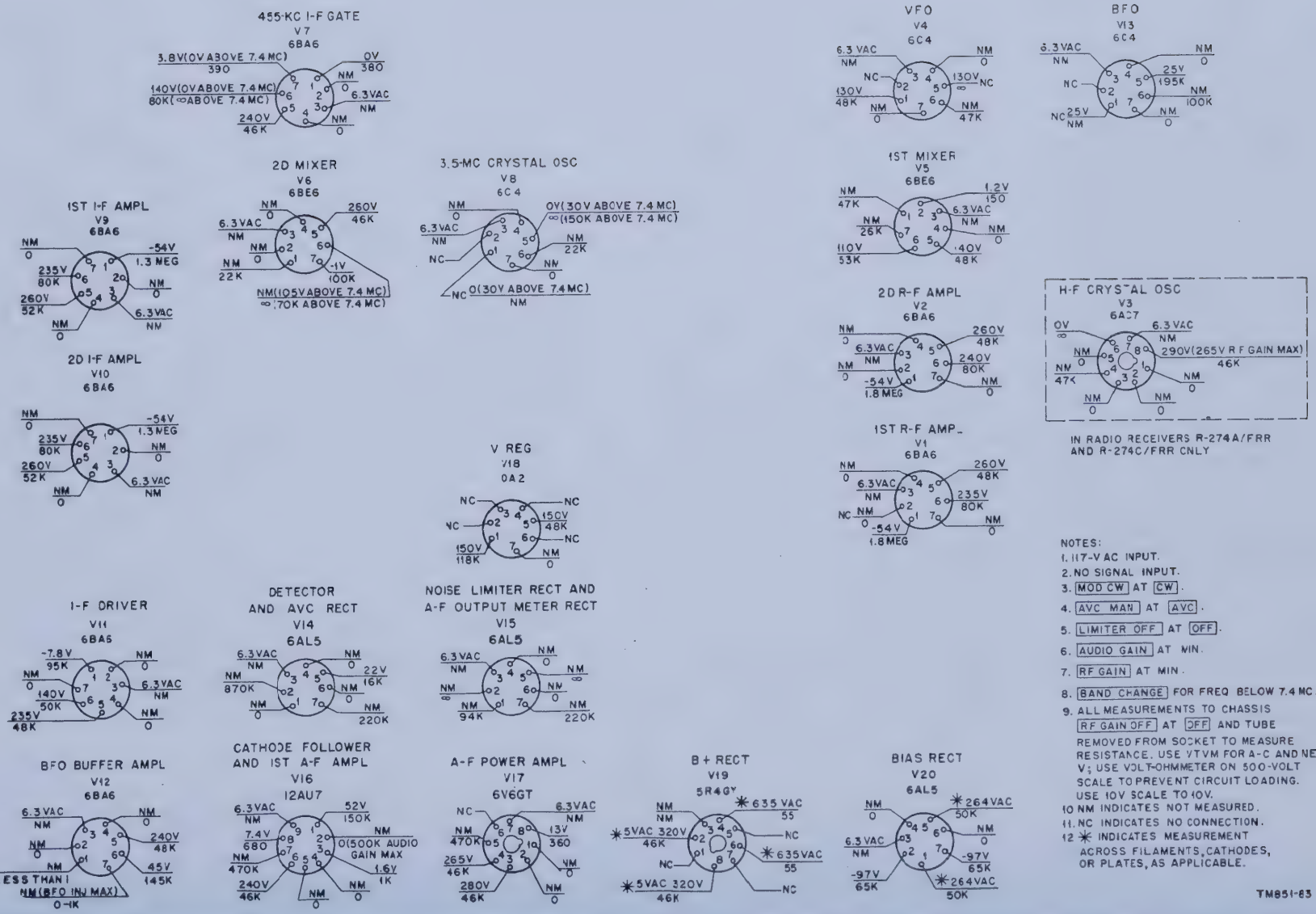

Figure 52. Radio Receivers R-483A/FRR, and variable frequency operation of R-274C/FRR, from serial No. 2 through 486, tube socket voltage and resistance diagram.

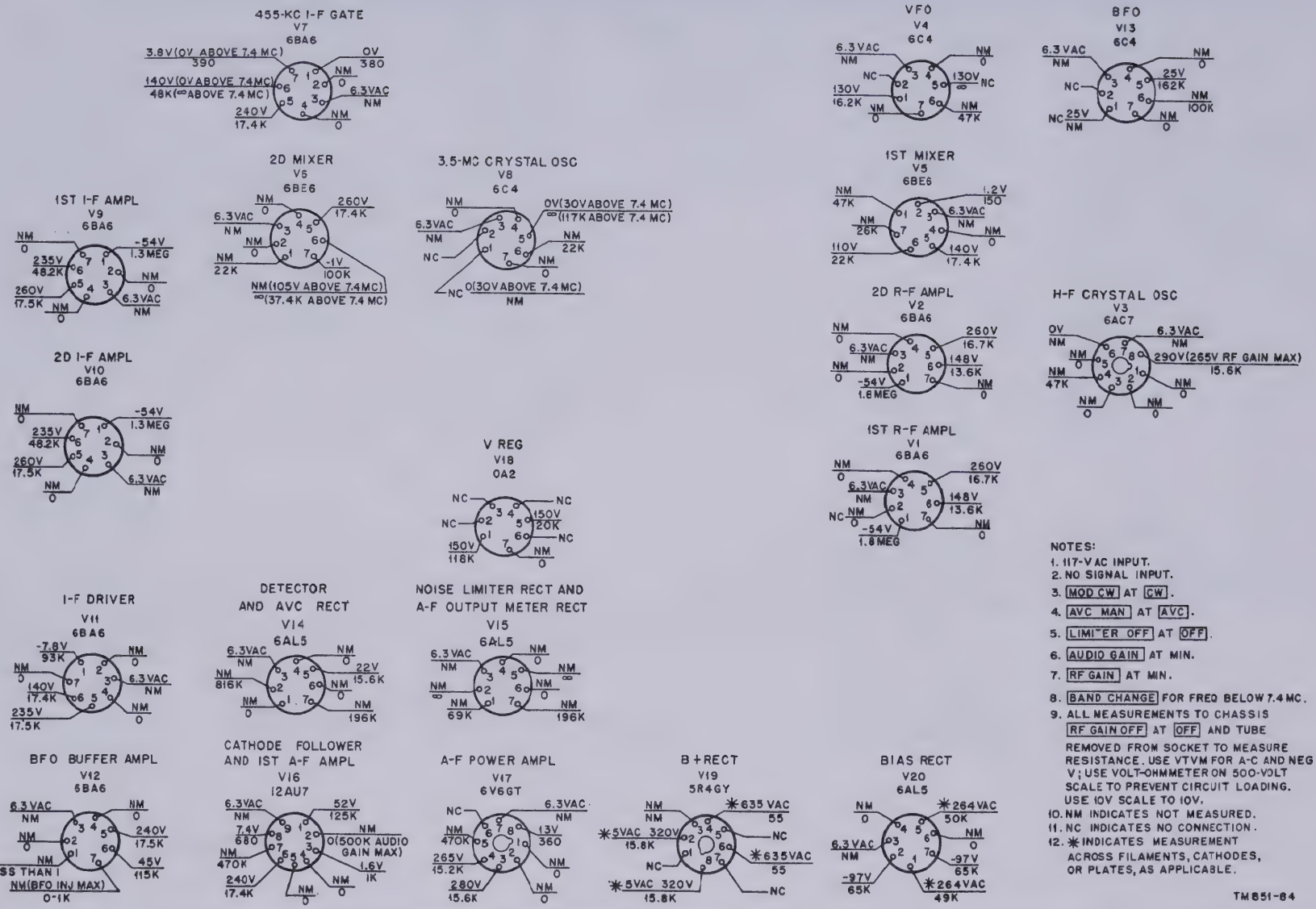

Figure 53. Radio Receiver R-274C/FRR, from serial No. 487 through 1569, variable frequency operation, tube socket voltage and resistance diagram.

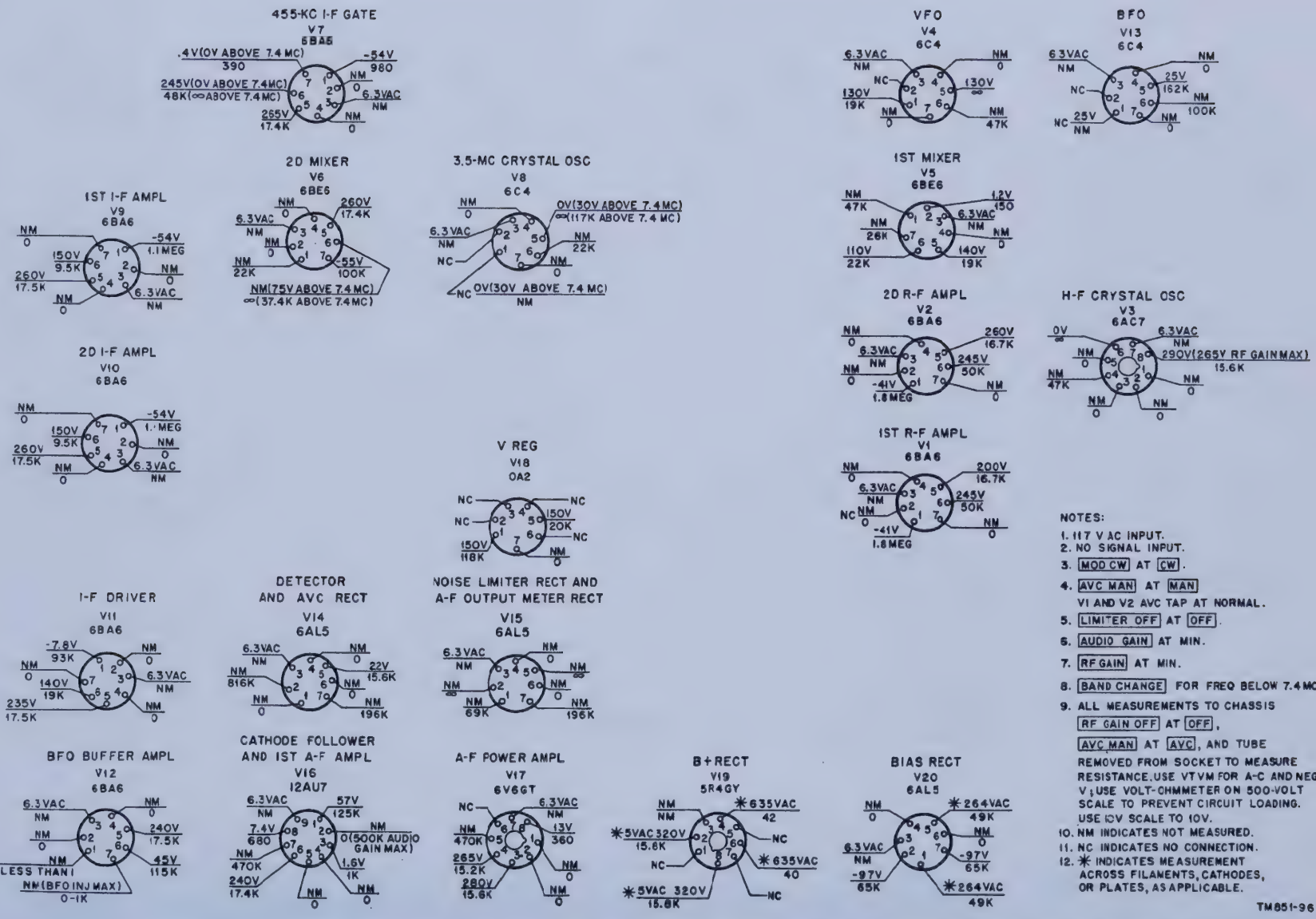

Figure 54. Radio Receiver R–274C/FRR, from serial No. 1570, variable frequency operation, tube socket voltage and resistance diagram.

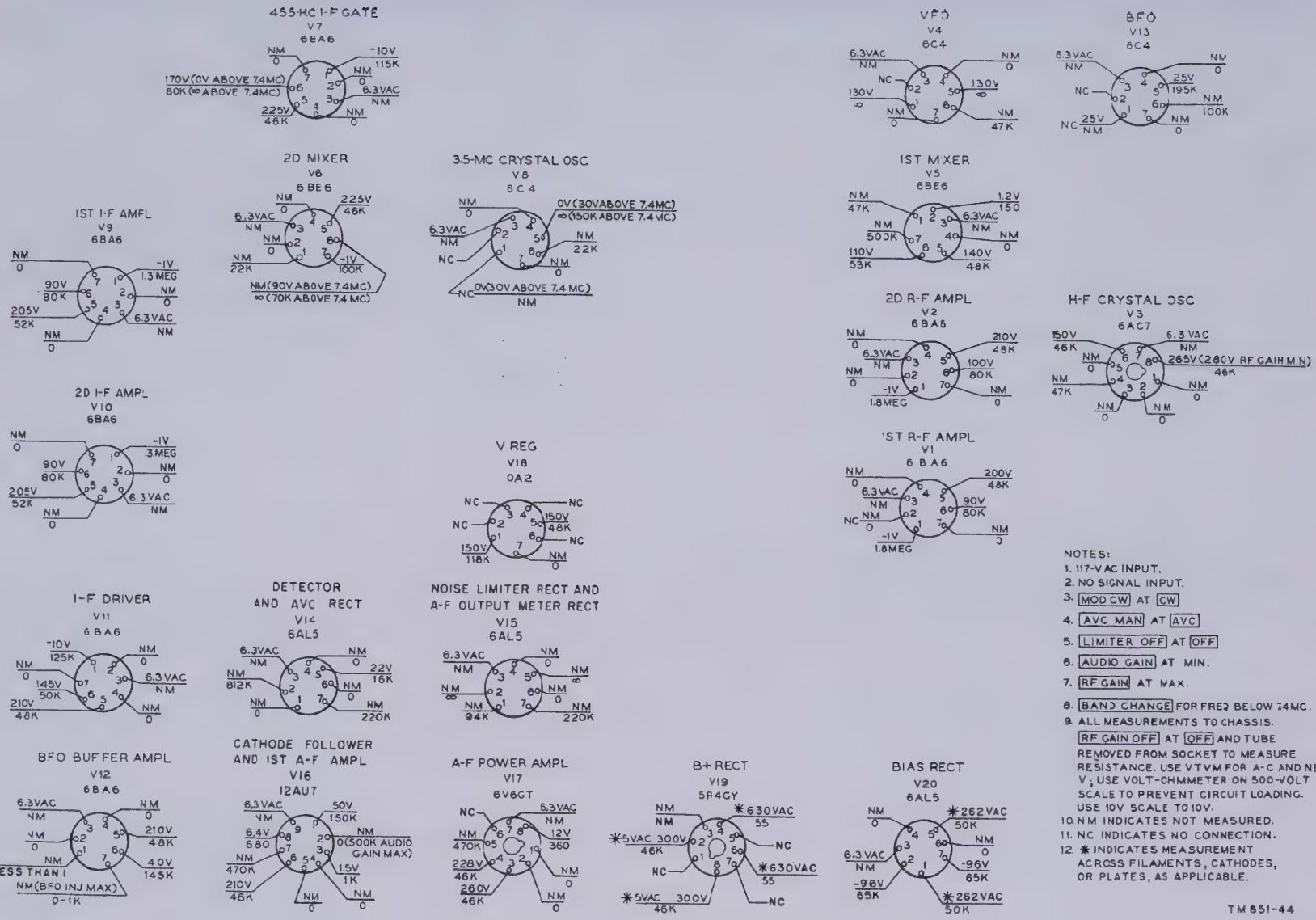

Figure 55. Radio Receiver R-274A/FRR, tube socket voltage and resistance diagram for crystal control positions 1 through 6.

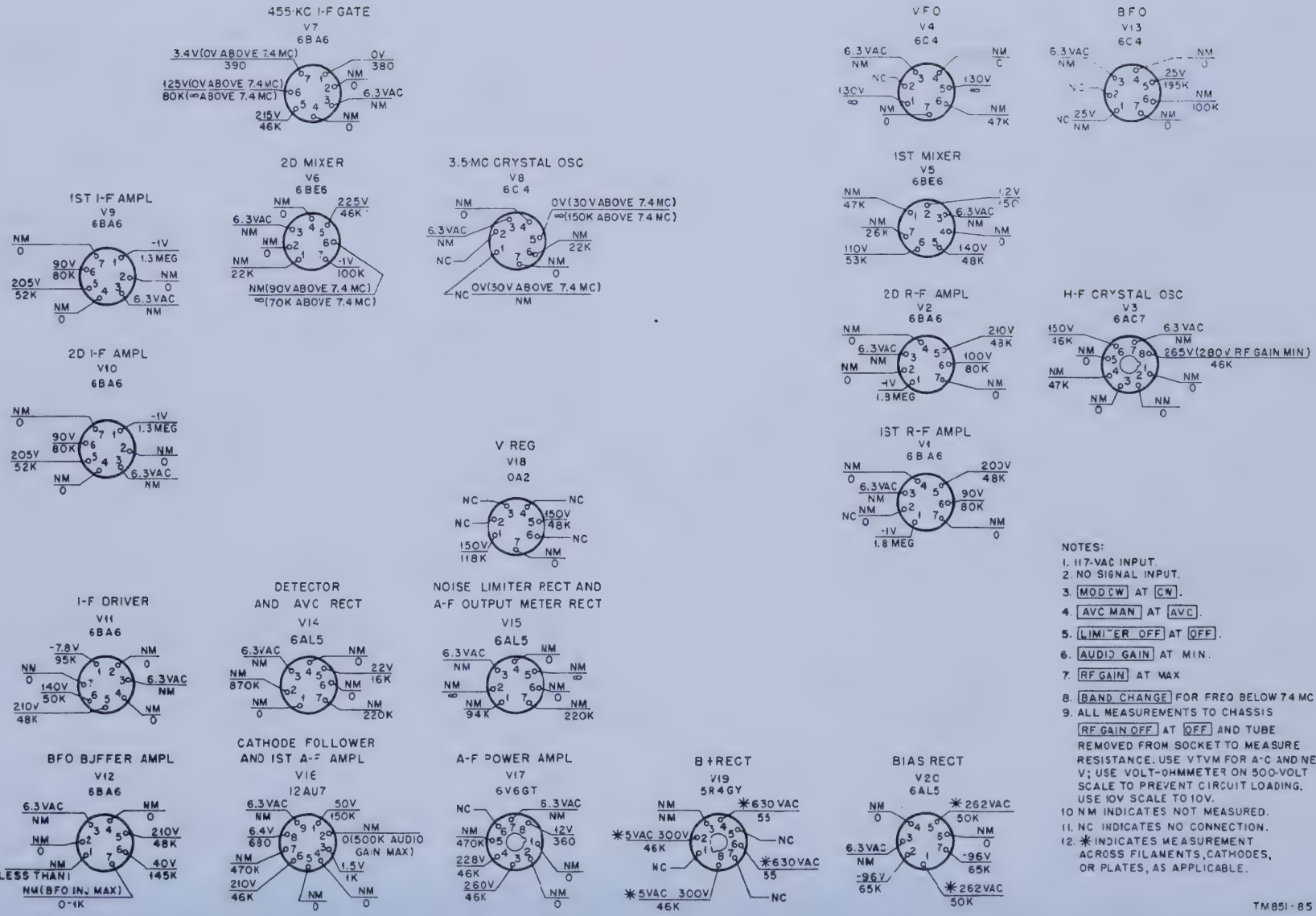

Figure 56. Radio Receiver R-274C/FRR, from serial No. 1 through 486, tube socket voltage and resistance diagram for crystal control positions 1 through 6.

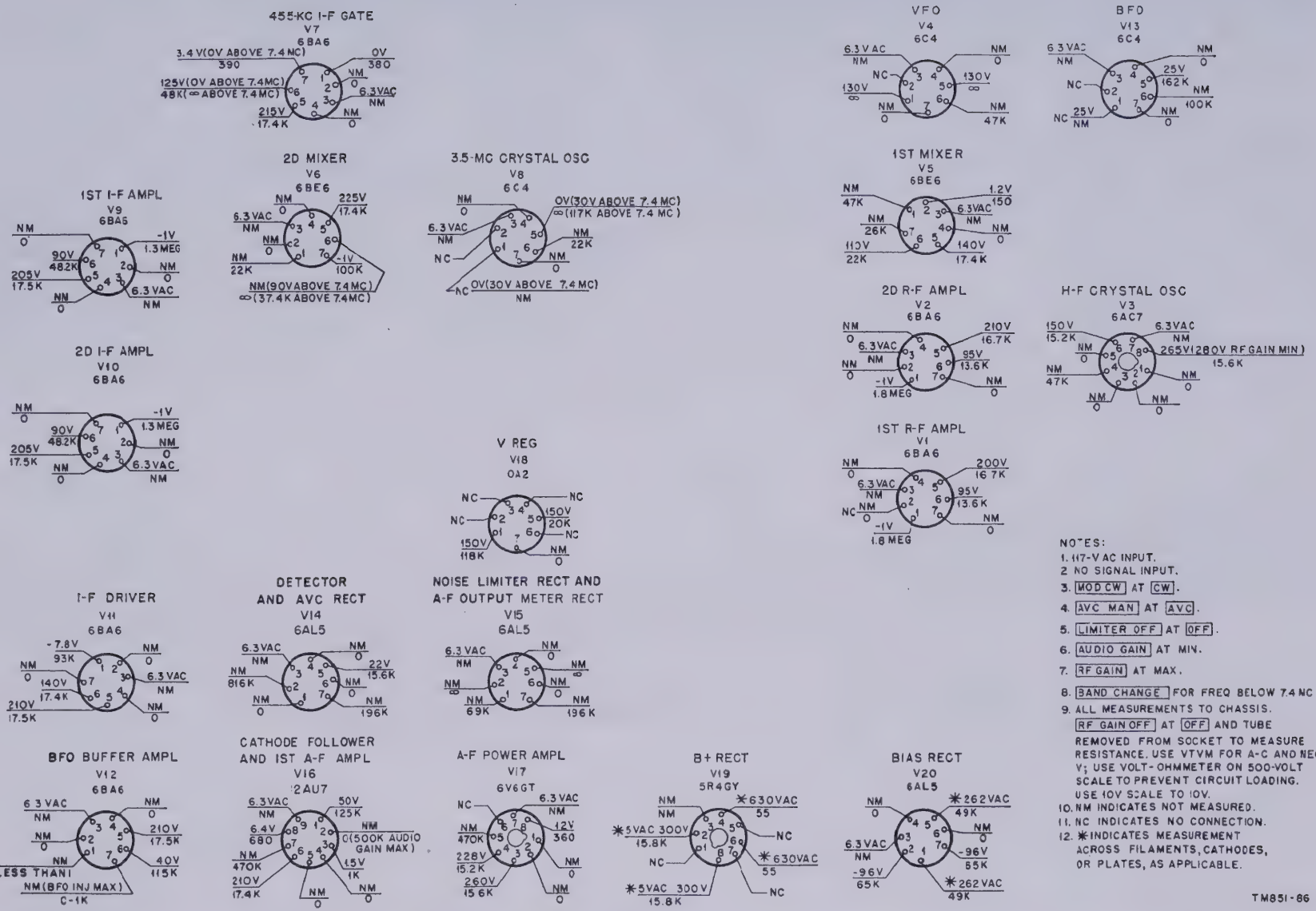

Figure 57. Radio Receiver R-274C/FRR, from serial No. 487 through 1569, tube socket voltage and resistance diagram for crystal control positions 1 through 6.

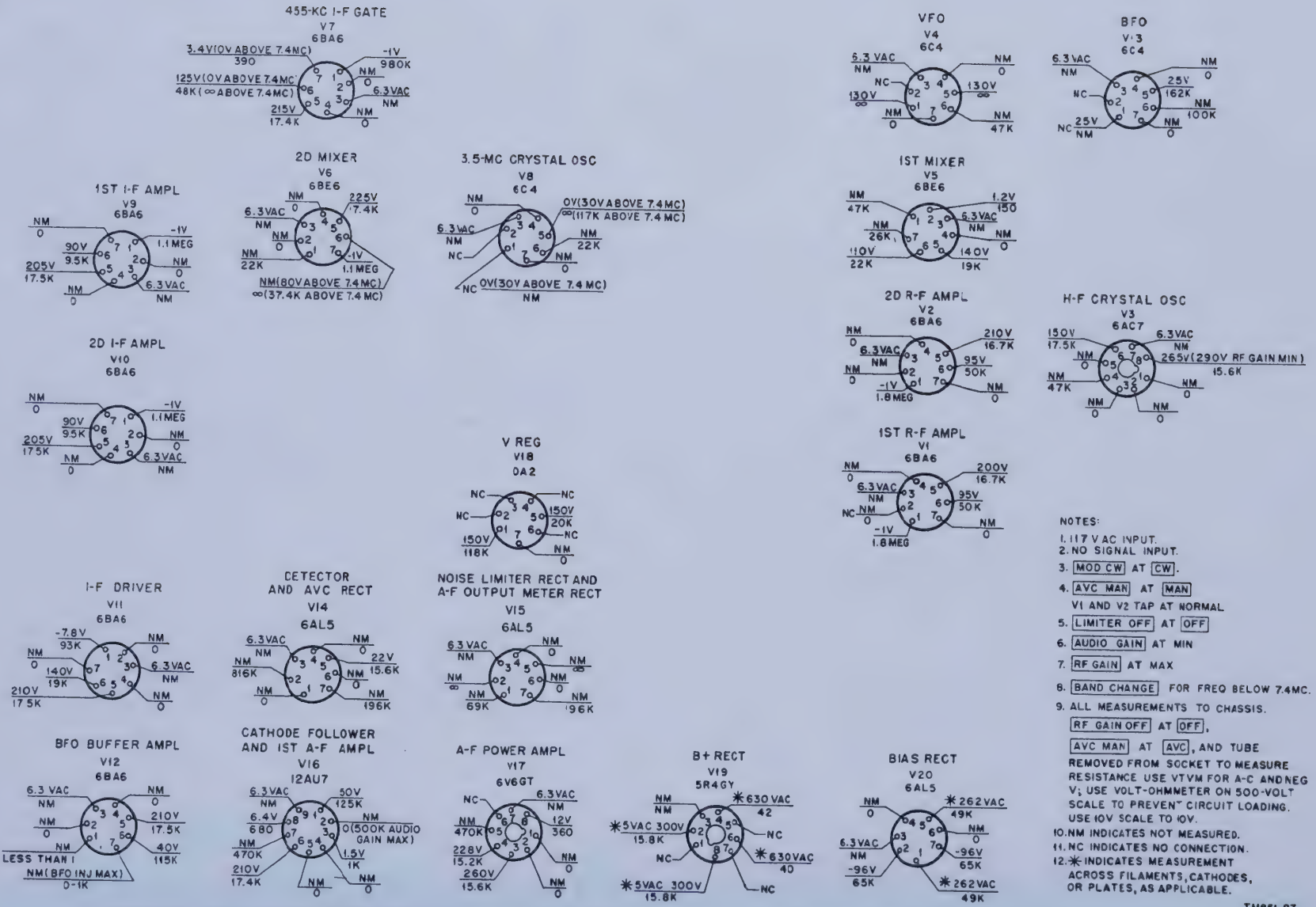

Figure 58. Radio Receiver R-274C/FRR, from serial No. 1570, tube socket voltage and resistance diagram for crystal positions 1 through 6.

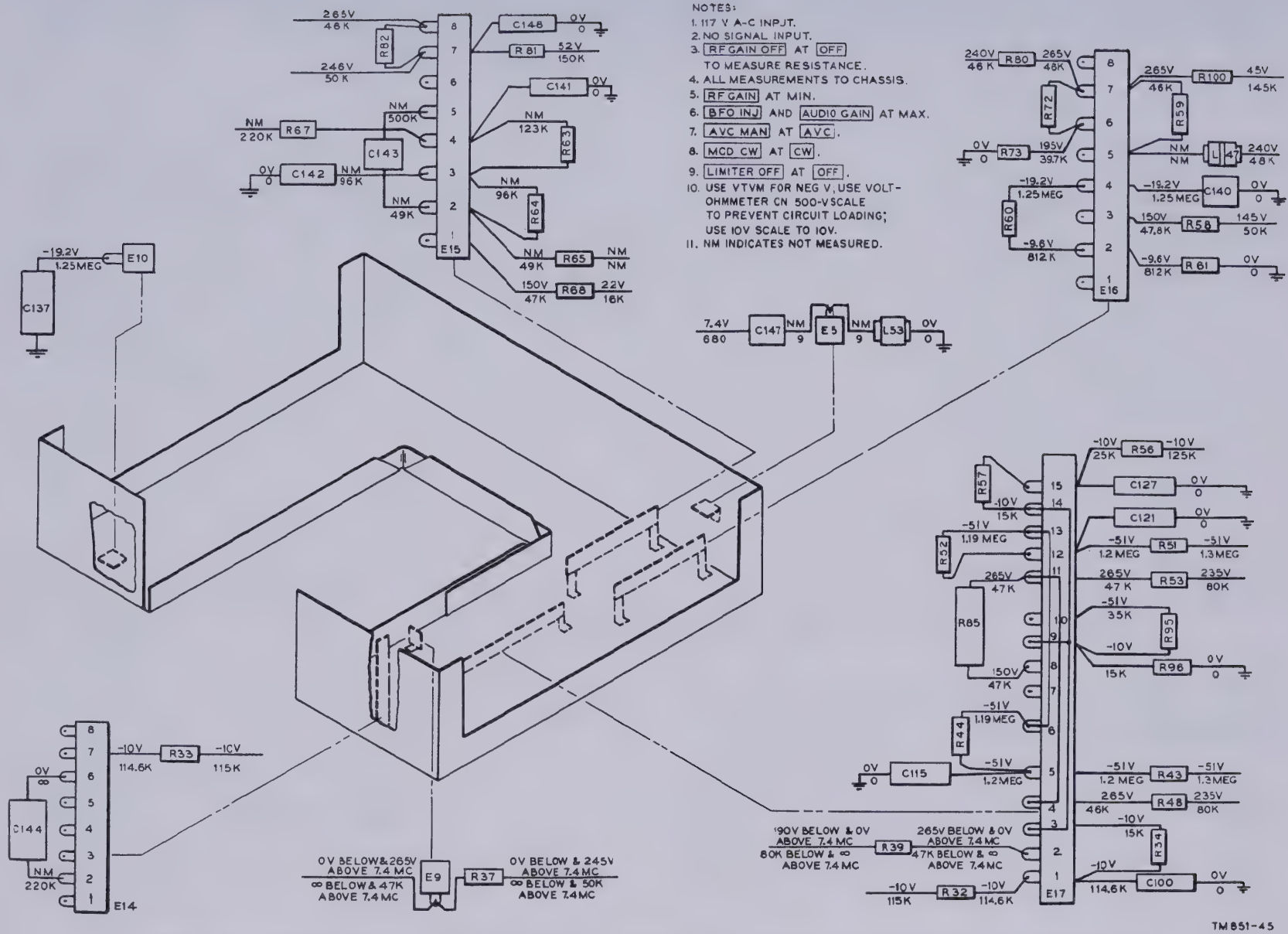

Figure 59. Radio Receivers R–483/FRR, R–320A/FRC, and R–274A/FRR, resistor-capacitor board, voltage and resistance diagram.

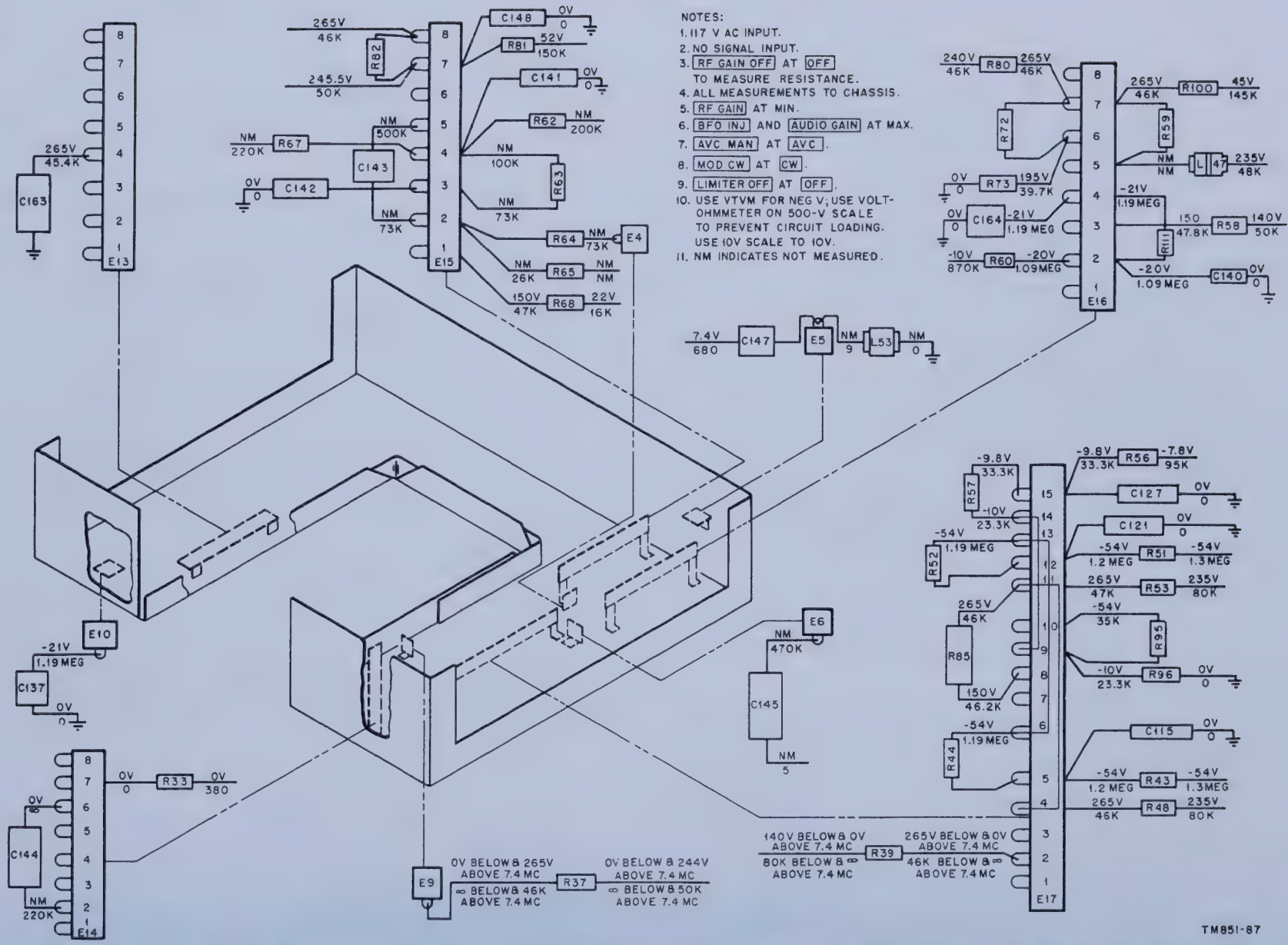

Figure 60. Radio Receiver R-483A/FRR, and Radio Receiver R-274C/FRR, from serial No. 1 through 486, resistor-capacitor board, voltage and resistance diagram.

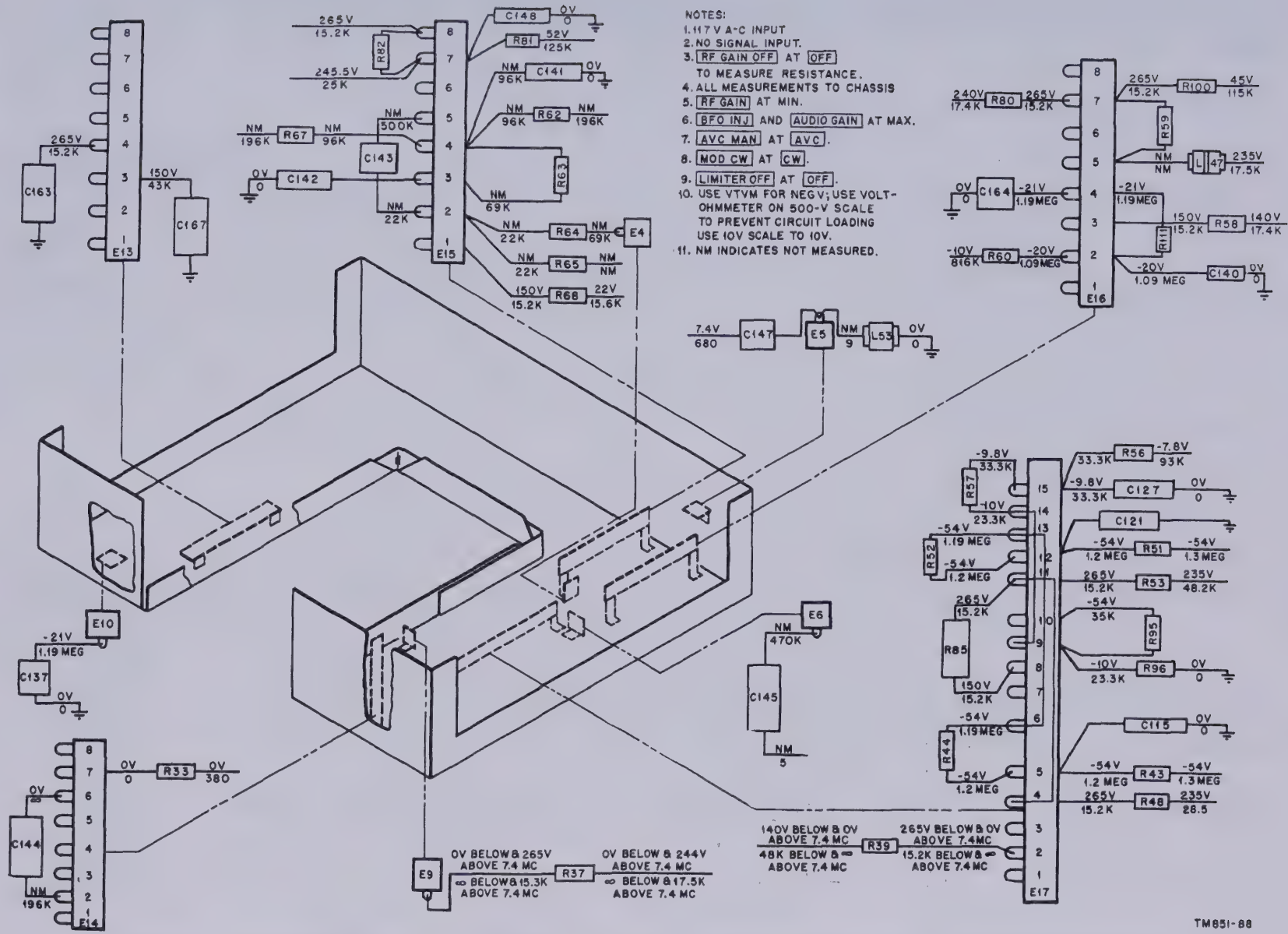

Figure 61. Radio Receiver R–274C/FRR, from serial No. 487 through 1569, resistor-capacitor board, voltage and resistance diagram.

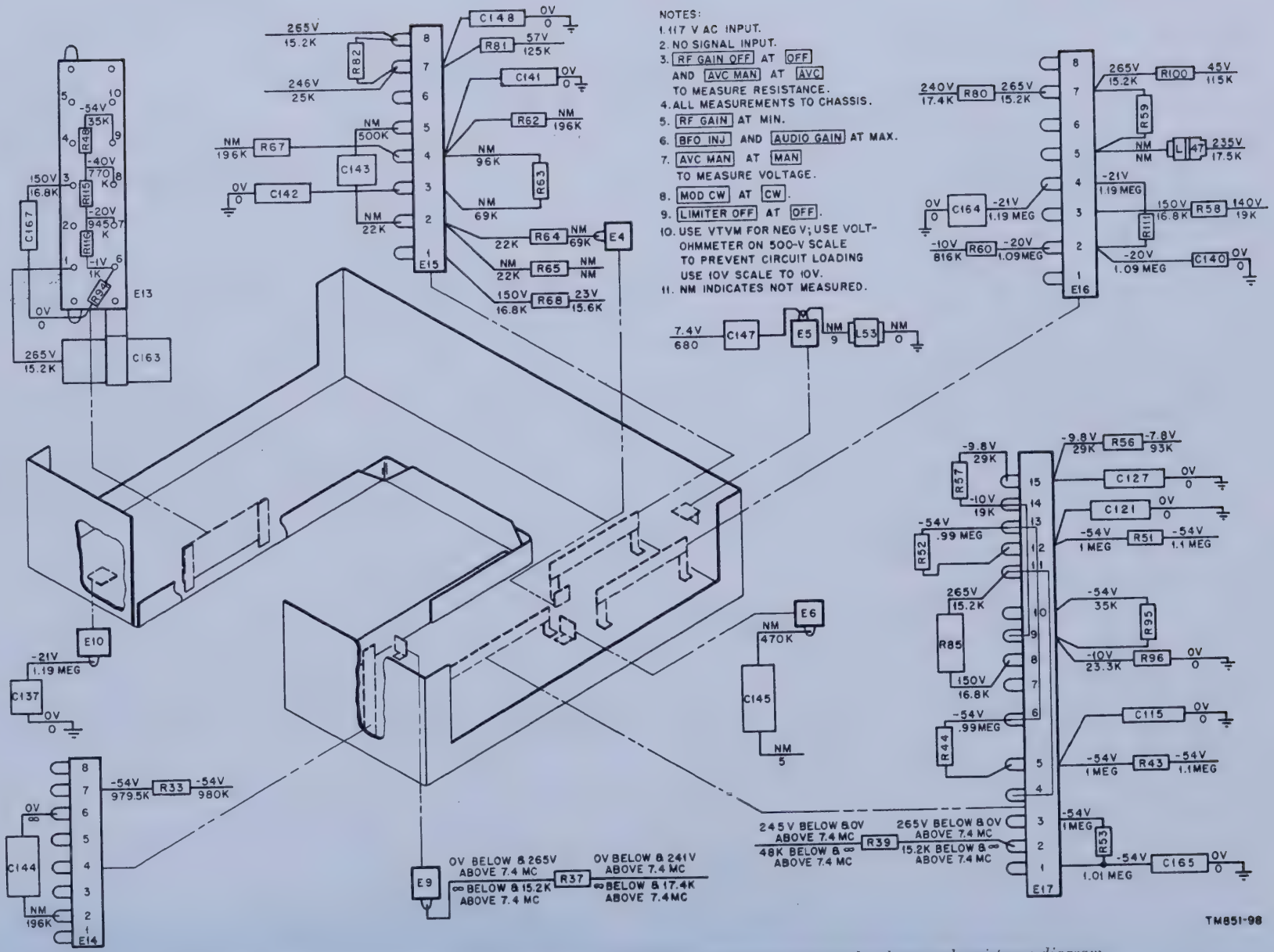

Figure 62. Radio Receiver R-274C/FRR, from serial No. 1570, resistor-capacitor board, voltage and resistance diagram.

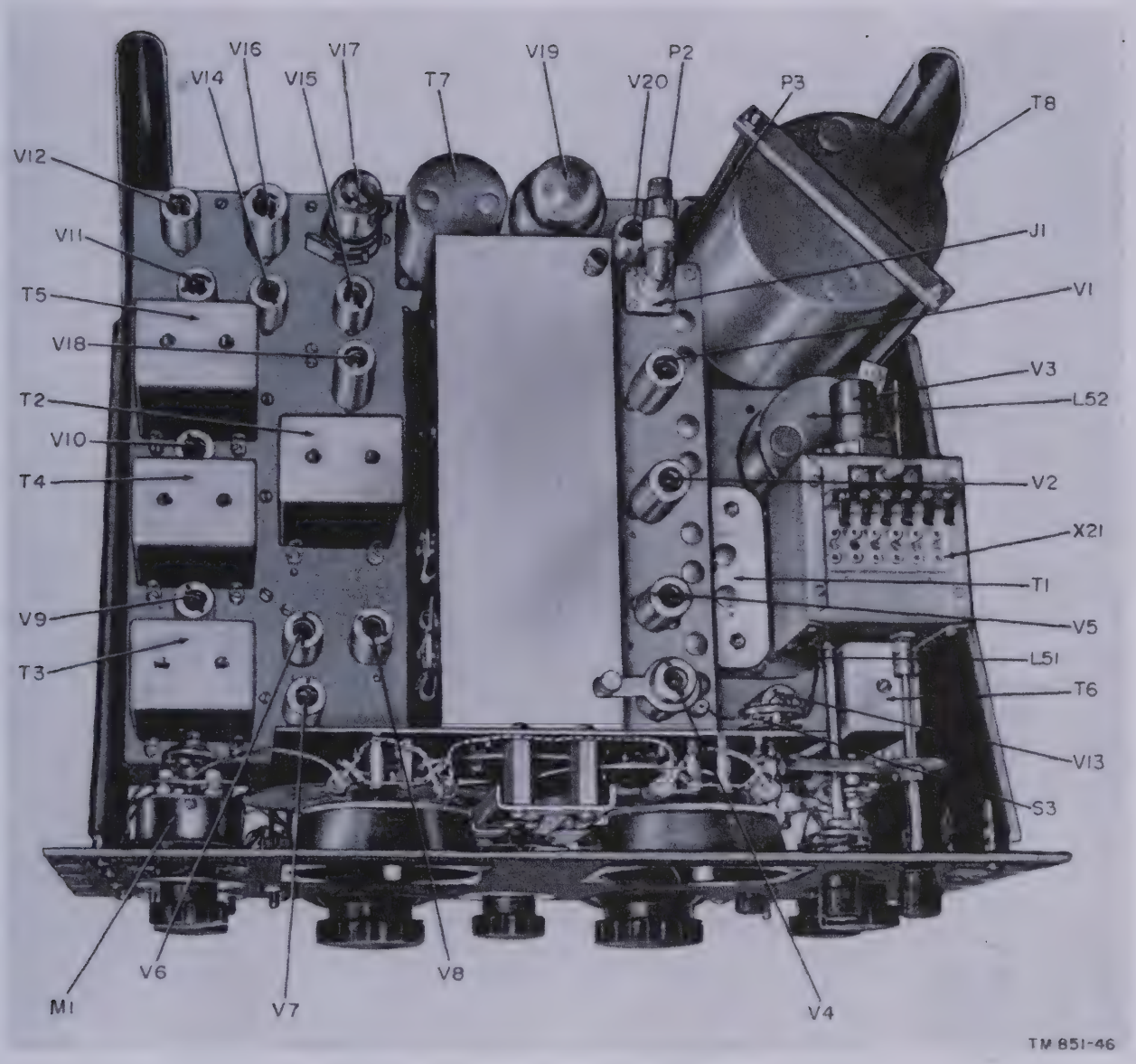

Figure 63. Radio Receiver R-274A/FRR, top view of chassis.

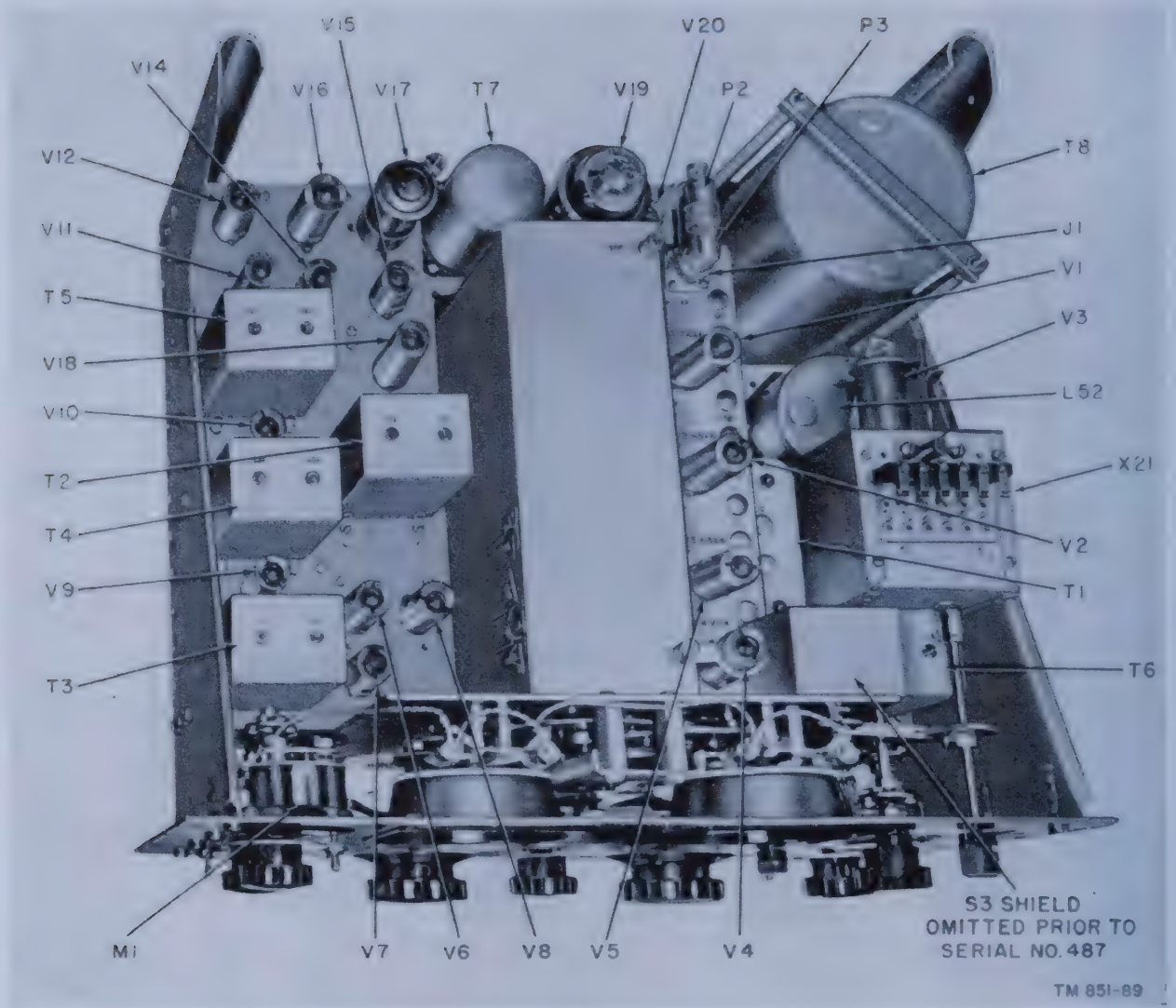

Figure 64. Radio Receiver R-274C/FRR, top view of chassis.

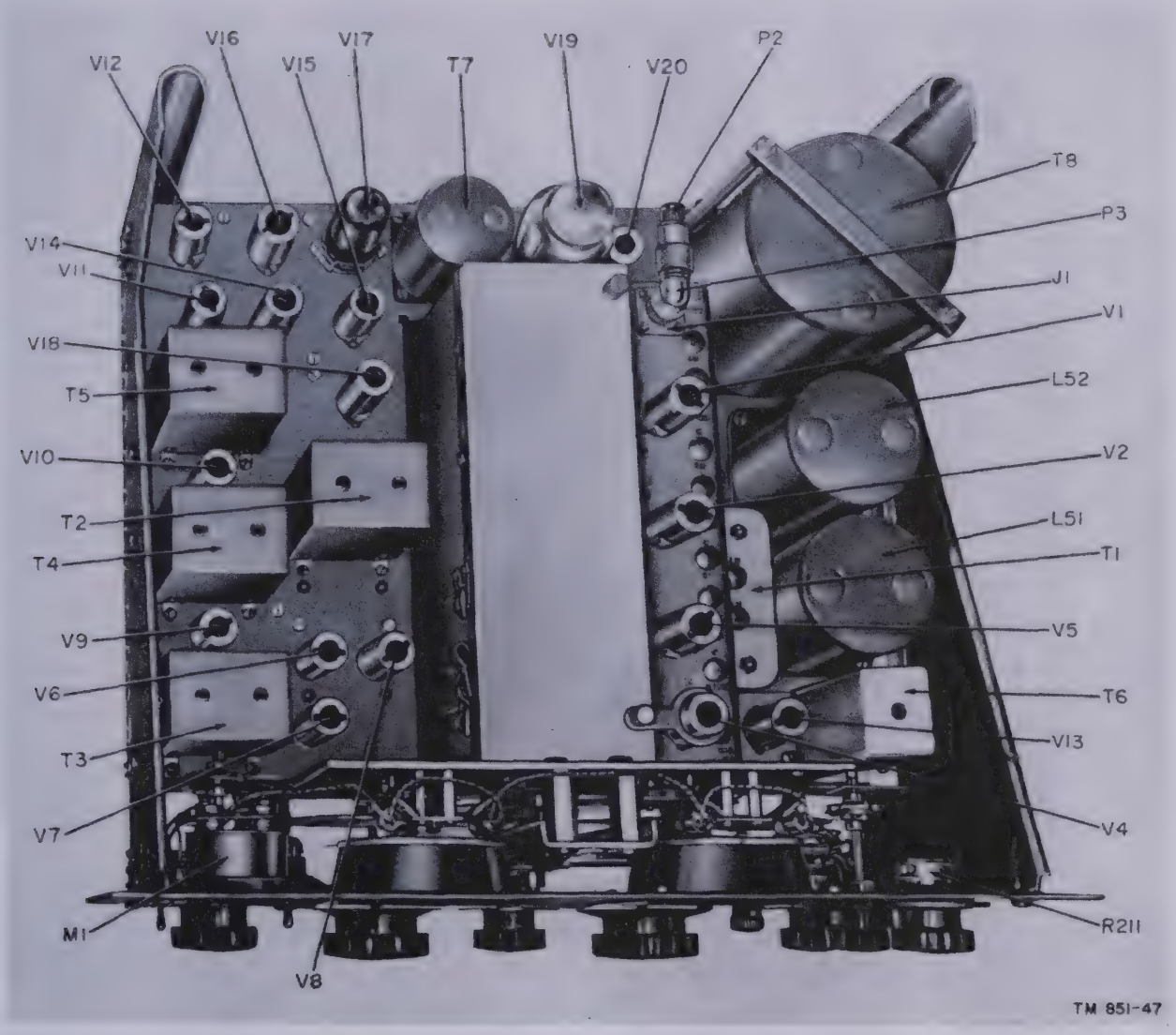

Figure 65. Radio Receiver R-320A/FRC, top view of chassis.

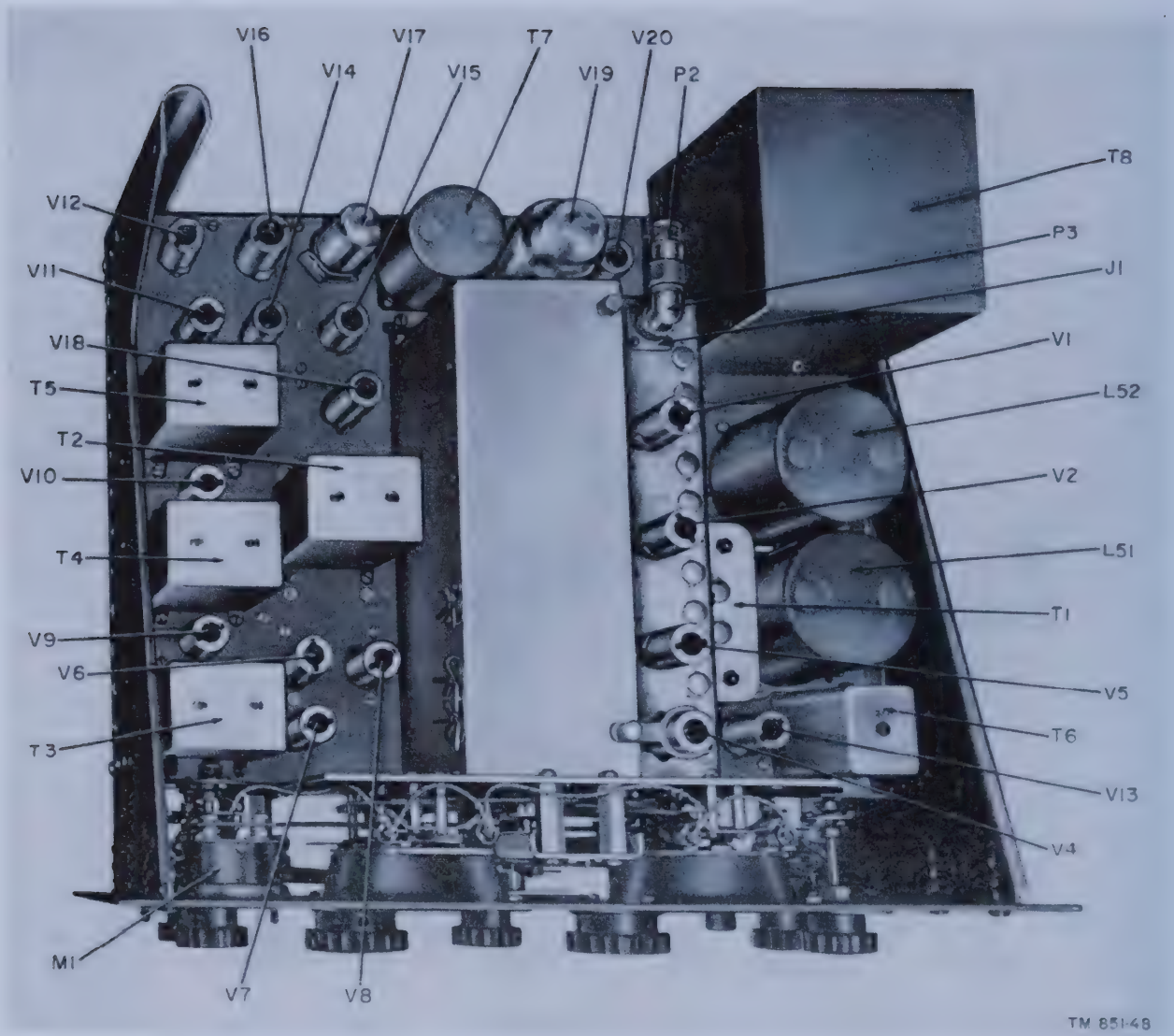

Figure 66. Radio Receiver R-483/FRR, top view of chassis.

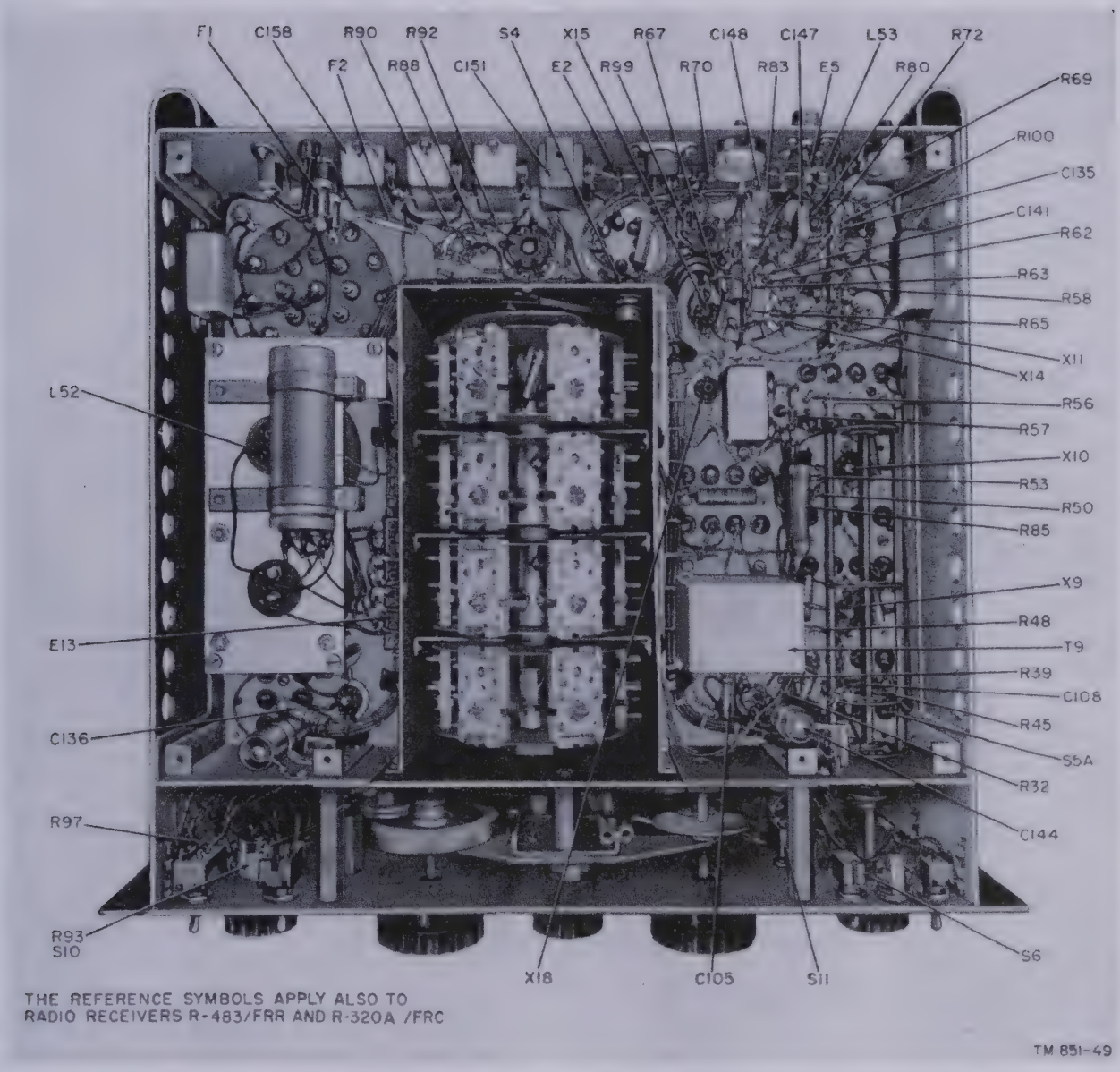

Figure 67. Radio Receiver R-274A/FRR, bottom view of chassis, tuning unit shield removed. (To identify parts see also figures 69 and 70.)

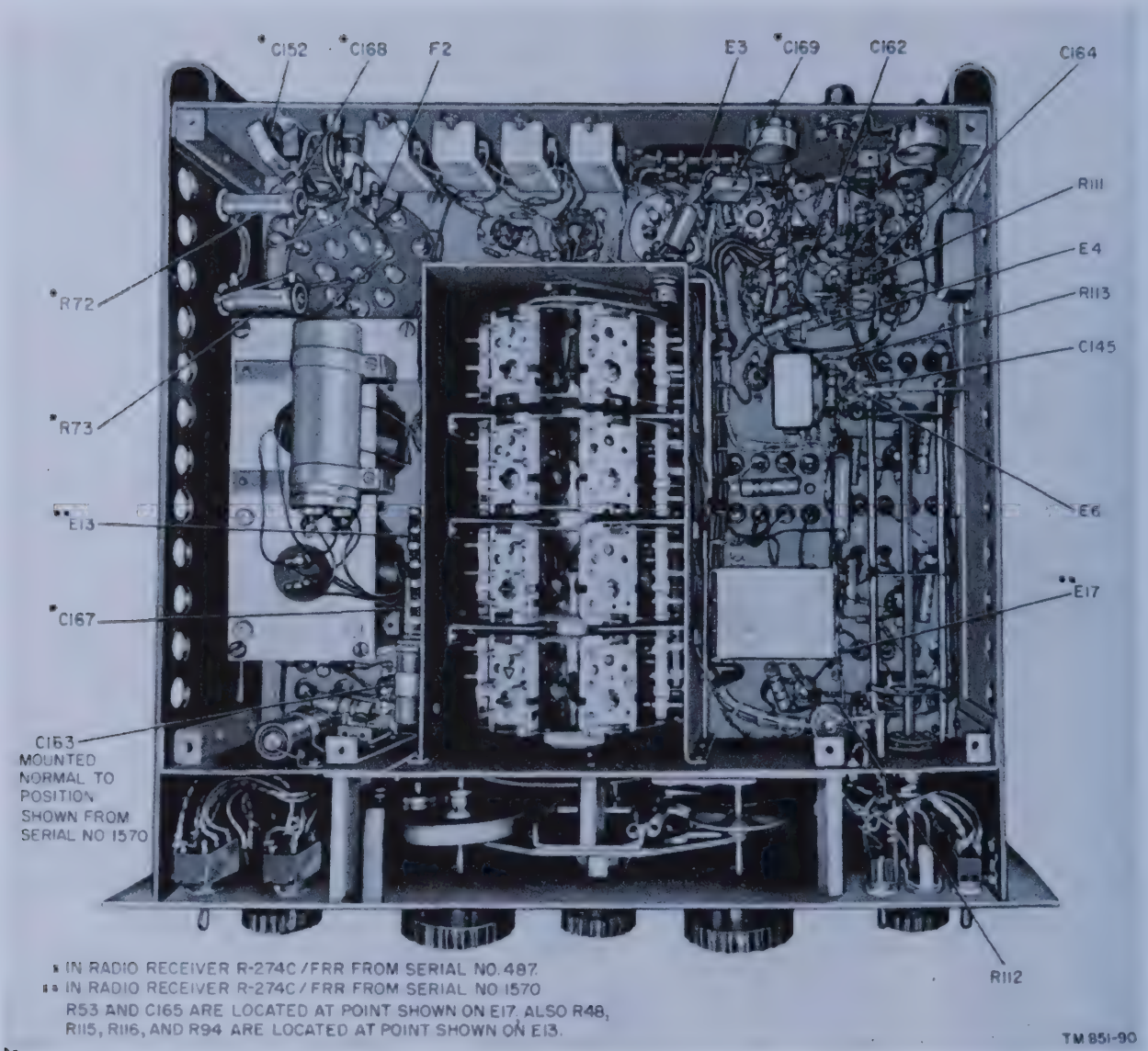

Figure 68. Radio Receivers R–274C/FRR or R–483A/FRR, bottom view of chassis. (To identify parts see also figures 67, 69, and 70.)

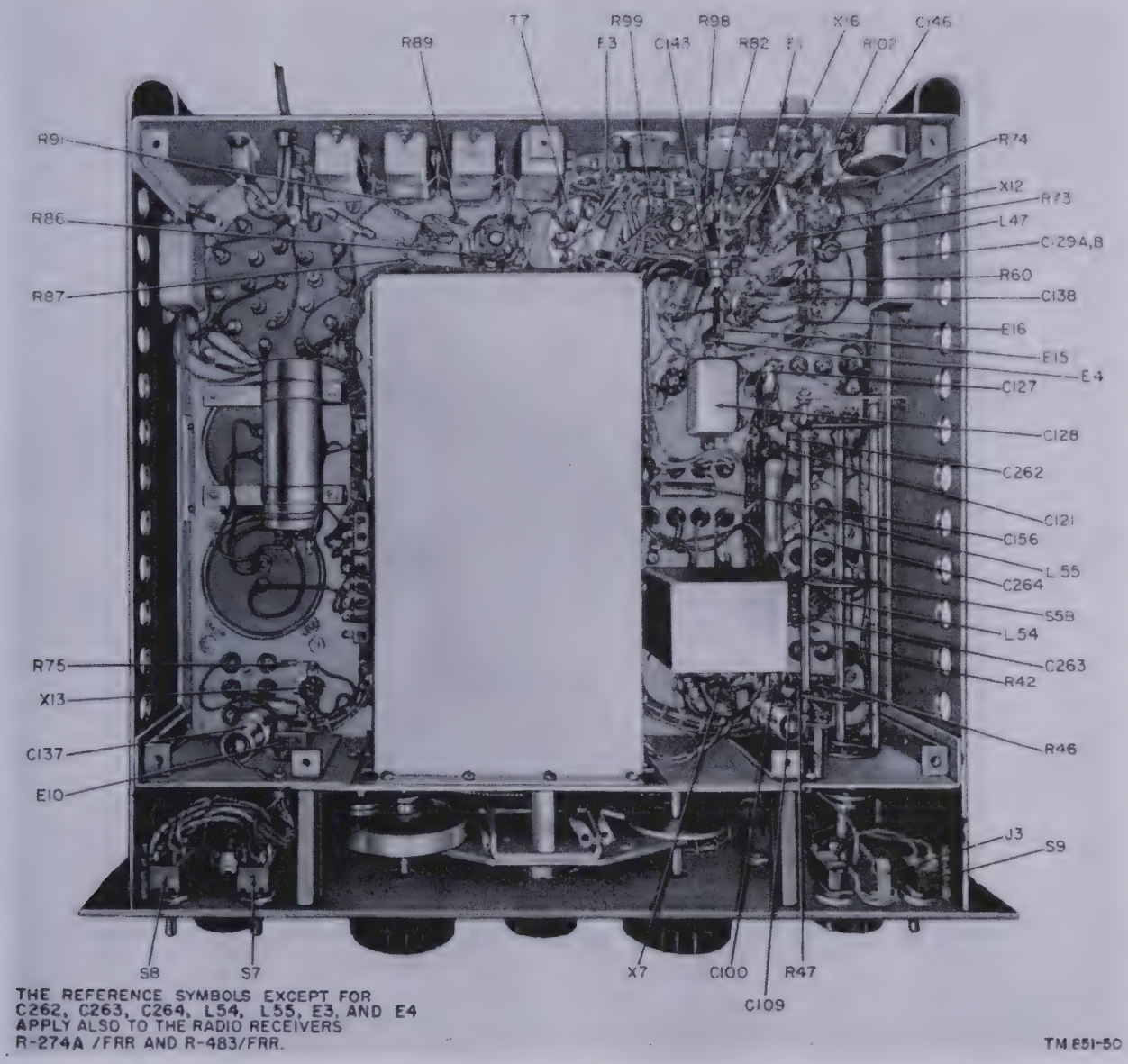

Figure 69. Radio Receiver R–320A/FRC, bottom view of chassis. (To identify parts see also figures 67 and 70.)

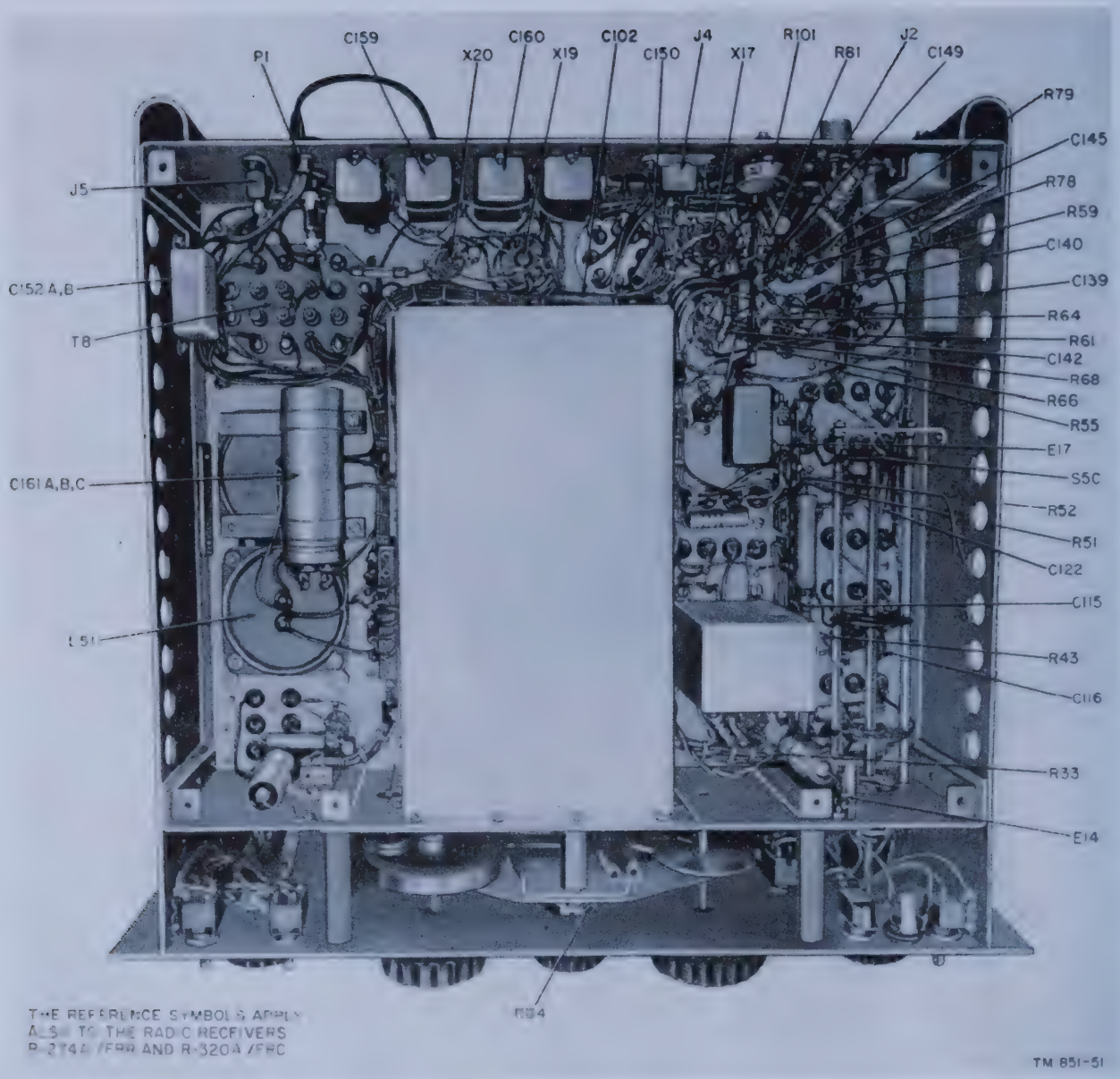

Figure 70. Radio Receiver R–483/FRR, bottom view of chassis. (To identify parts see also figures 67 and 69.)

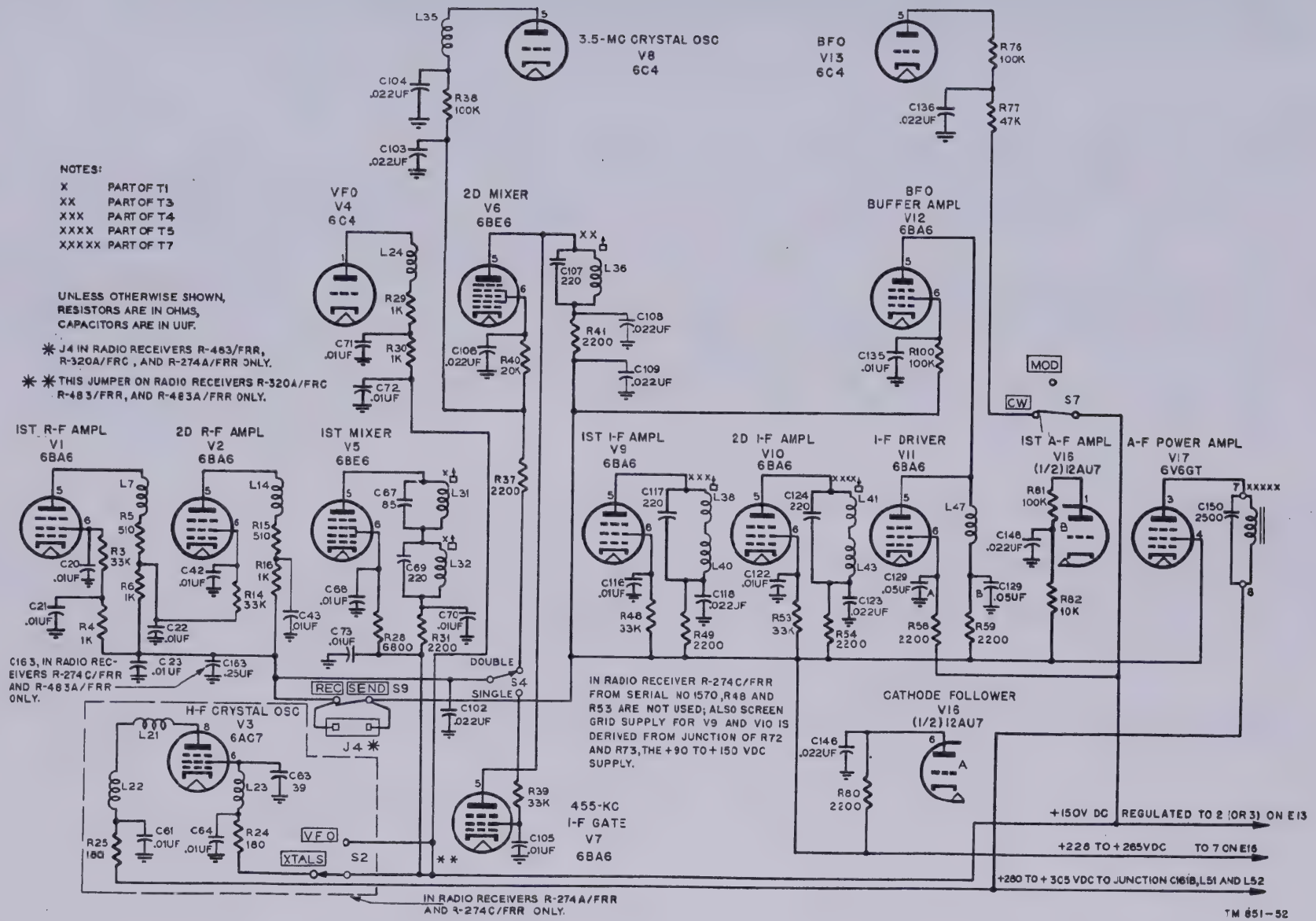

Figure 71. Radio Receiver, all types other than R–274C/FRR, from serial No. 487 through 1569, B+ voltage distribution.

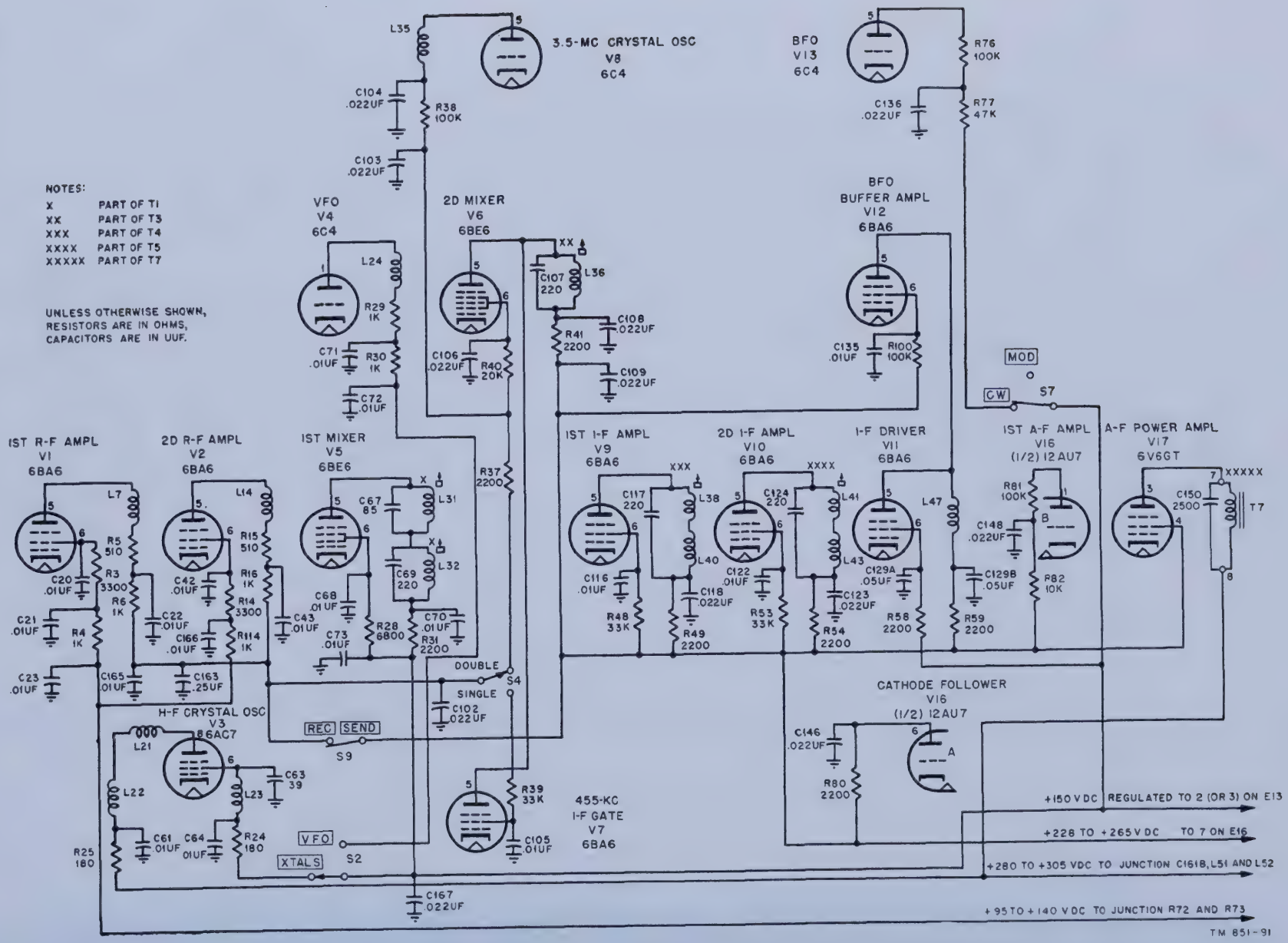

Figure 72. Radio Receiver R-274C/FRR, from serial No. 487 through 1569, B+ voltage distribution.

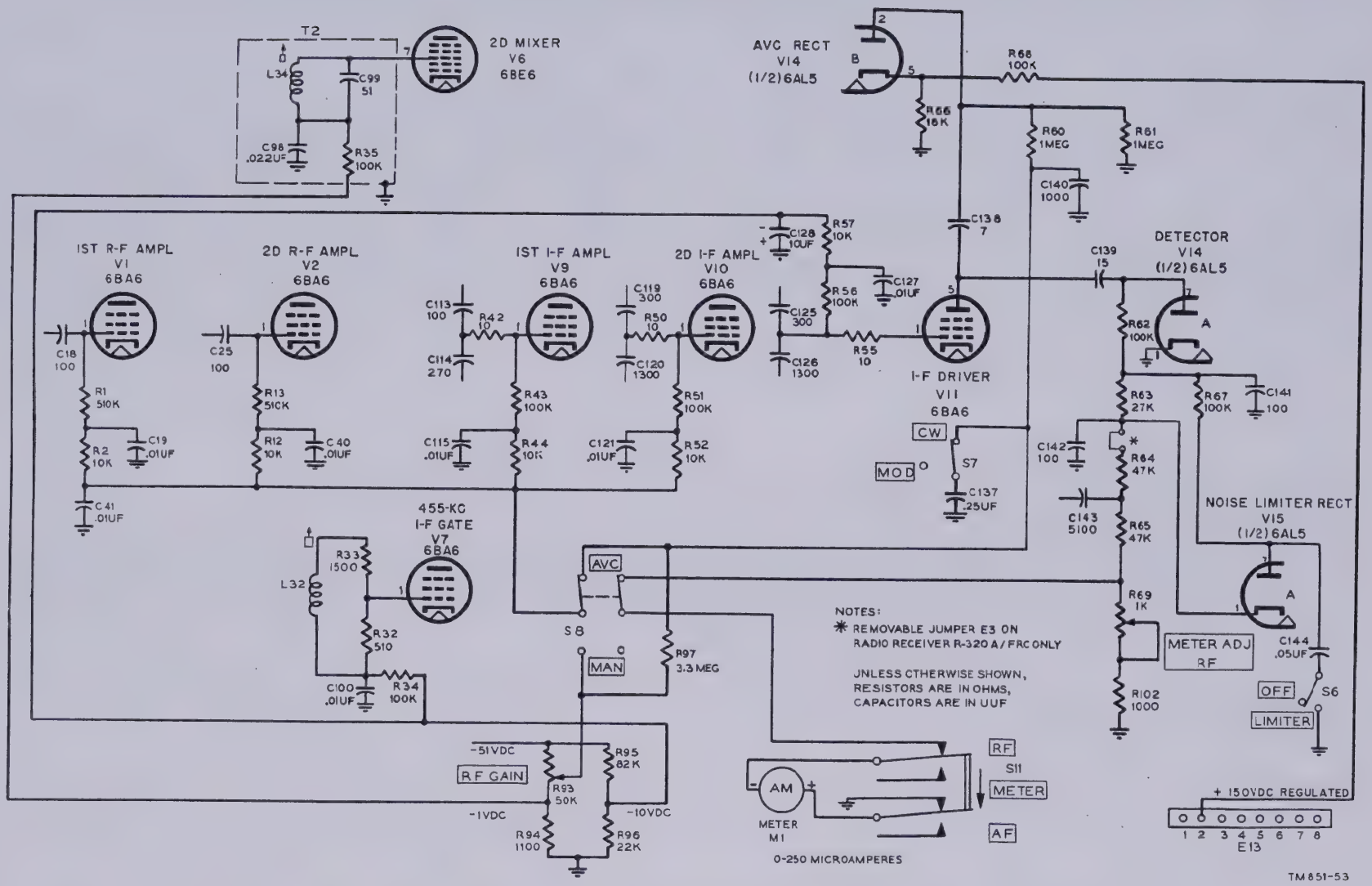

Figure 73. Radio Receiver, all types other than R-274C/FRR and R-483A/FRR, avc and bias voltage distribution.

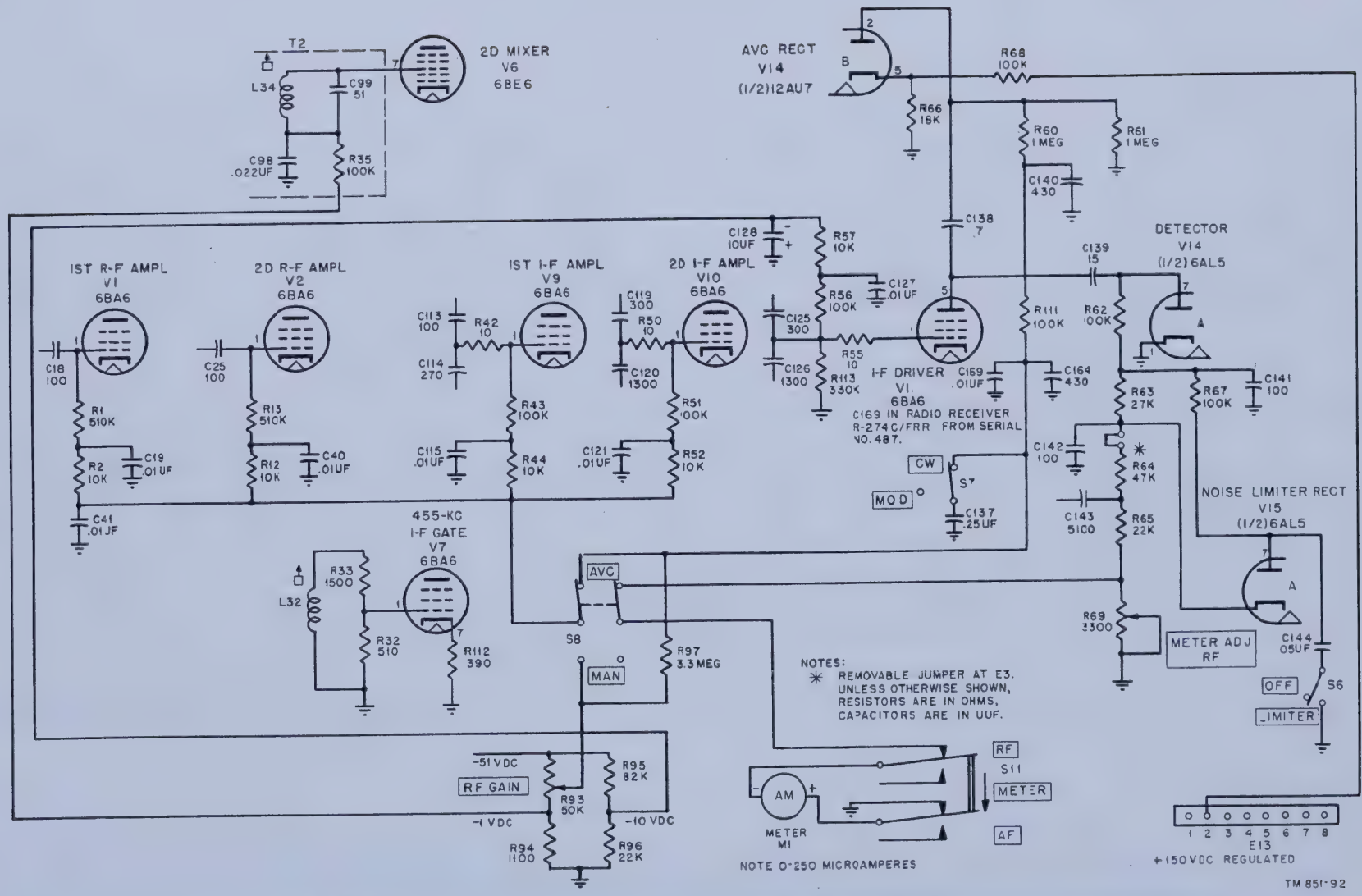

Figure 74. Radio Receivers R-274C/FRR, from serial No. 1 through 1569, and R-483A/FRR, avc and bias voltage distribution.

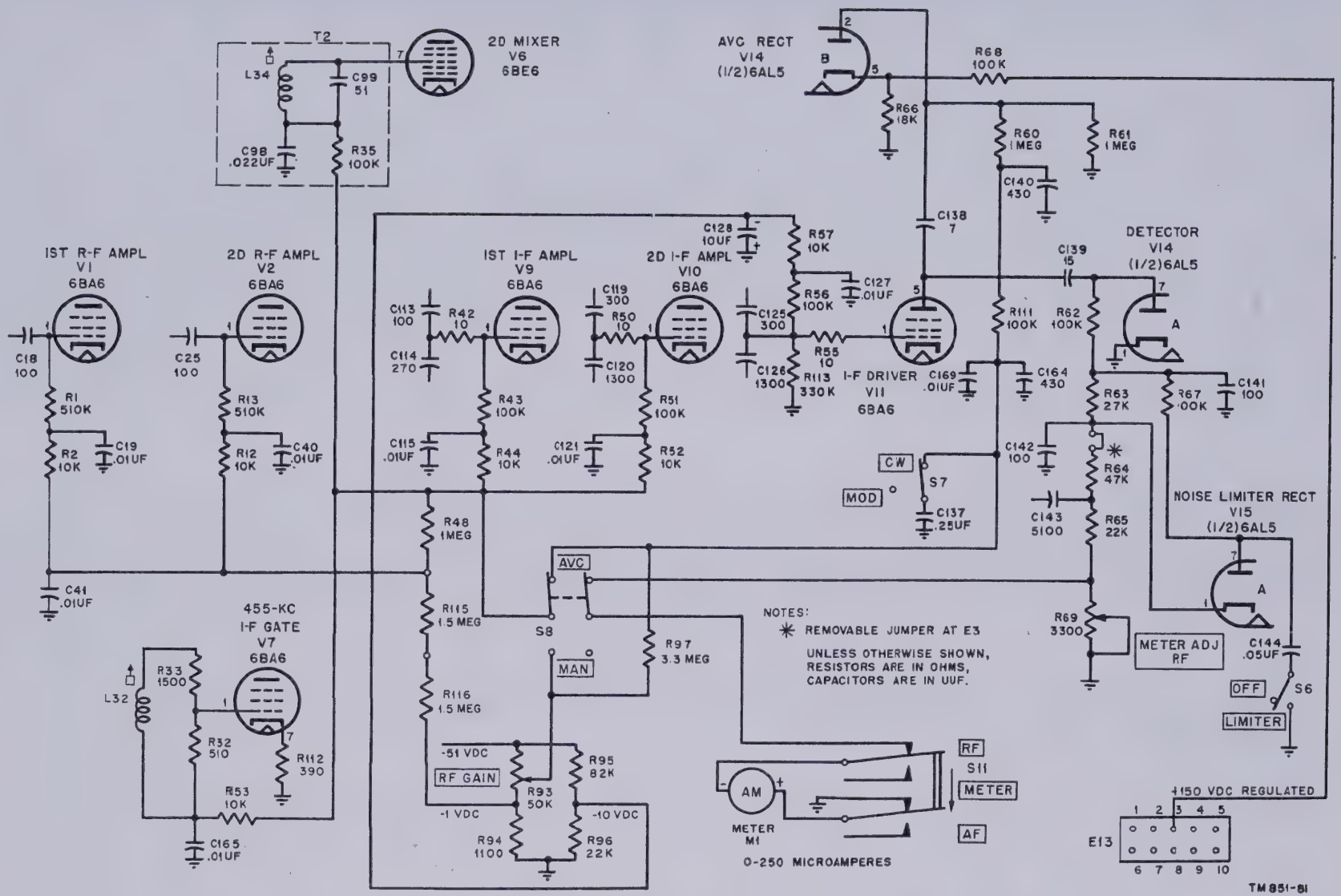

Figure 75. Radio Receiver R–274C/FRR, from serial No. 1570, avc and bias voltage distribution.

83. D-C Resistances of Transformers and Coils

The d-c resistances of the transformer windings and the coils in the radio receiver are listed below. The average resistance (in ohms) of a representative quantity of items in each instance also is listed. Resistance variations to the extent of plus or minus 15 percent are to be expected and are not sufficient cause for rejection.

Receiver type	Transformer or coil	Winding or terminals	Ohms
Radio Receivers, R–320A/FRC, R–274A/FRR, and R–274C/FRR.	T8 (50–60 cps)	1–9	31.
		10–11	31.
		11–12	31.
		13–14	Less than 1.
		15–16	Less than 1.
		17–18	Less than 1.
		19–20	Less than 1.
Radio Receivers, R–483/FRR and R–483A/FRR.	T8 (25–60 cps)	1–9	8.5.
		10–11	80.
		11–12	80.
		13–14	Less than 1.
		15–16	Less than 1.
		17–18	Less than 1.
		19–20	Less than 1.
	L25	Primary	115.
		Secondary	6.8.
	L8, L15	Primary	Less than 1.
		Secondary	9.2.
	L1	Primary	1.43.
		Secondary	9.
	L26	Primary	Less than 1.
		Secondary	1.05.
	L9, L16	Primary	Less than 1.
		Secondary	1.25.
	L2	Primary	Less than 1.
		Secondary	1.4.
	L3, L4, L5, L6, L10, L11, L12, L13, L17, L18, L19, L20, L27, L28, L29, L30.	Primary	Less than 1.
	T7	1–3	41.6.
		2–4	41.3.
		5–6	685.
		7–8	426.
	L7		8.5.
	L14		8.5.
Radio Receivers, R–274C/FRR and R–274A/FRR.	L21		21.5.
Radio Receivers R–274C/FRR and R–274A/FRR.	L22		88.5.
Radio Receivers R–274C/FRR and R–274A/FRR.	L23		155.

Receiver type	Transformer or coil	Winding or terminals	Ohms
	L24		8.5.
	L25	Primary Secondary	1.15. 6.8.
	L26	Secondary	1.05.
	L31	Primary Secondary	Less than 1. 1.17.
	L32	Primary Secondary	5.35. .68.
	L33	Primary Secondary	Less than 1. 1.65.
	L34	Primary Secondary	Less than 1. 1.55.
	L35		8.5.
	L36	Primary Secondary	5.39. 2.77.
	L37		9.42.
	L38		3.62.
	L39		3.62.
	L40		1.47.
	L41		3.62.
	L42		3.62.
	L43	Per pie	1.47.
	L44		2.58.
	L45		2.5.
	L46		1.31.
	L47		46.
	L48		2.
	L49		2.7.
	L50		2.7.
	L51		150.
	L52		354.
	L53		9.
Radio Receiver R–320A/FRC	L54		8.5.
Radio Receiver R–320A/FRC	L55		8.5.

84. Troubleshooting R-F Strip

The r-f strip of the radio receiver requires removal to render accessible the circuitry of r-f amplifiers V1 and V2, the circuitry of v-f oscillator V4, and the circuitry of first mixer V5, which is common to each of the six frequency bands of the receiver. When the probable trouble is isolated to the r-f strip, it is disassembled (par. 90*e*) from the receiver. It is then externally reconnected to the receiver to make accessible its circuitry to locate the circuit fault or defective part; tube socket terminal resistance and voltage checks (par. 82) are made first with regard to V1, V2, V4, and V5 to further isolate the fault. To complete the circuitry to the r-f strip, the r-f tuner subassemblies (for any one of the six frequency bands of the receiver) may be seated in the r-f strip steatite base *V* contacts. No attempt need be made to reconnect the four gang variable air capacitor to the removed r-f strip, since it can be checked easily for shorts and does not affect any of the voltage and resistance measurements made to locate the defective part; but a chassis ground connection must be provided to the r-f strip.

85. Signal Substitution Notes

a. Signal substitution requires a source of audio, i-f, and r-f signals (par. 78).

b. In addition, a headset or permanent magnet loudspeaker is necessary. Refer to paragraph 14 with regard to the headset required. A loudspeaker, if used, should provide a match for the 600-ohm AUDIO OUTPUT terminals of the receiver by means of a matching transformer.

c. A volt-ohmmeter and tube tester are used to isolate the defective part and tube after the faulty stage is determined by signal substitution.

d. A miniature tube socket adapter is also needed; an octal tube socket adapter is a further requirement in Radio Receivers R–274A/FRR and R–274C/FRR. All the tube socket terminals are accessible from the bottom of the receiver chassis except those of V1, V2, V4, and V5, and also V3 in Radio Receivers R–274A/FRR and R–274C/FRR. Use the miniature tube adapter for V1, V2, V4, V5, and the octal tube socket adapter for V3 (par. 78).

e. In the tests described in paragraphs 86, 87, and 88, ground one side of the output of the signal generator to the receiver chassis and connect the other side through a capacitor (.01-μf) to the receiver point as directed.

f. Note the volume, and listen for serious distortion from the loudspeaker or headset at the various points in the signal substitution procedure. When working back from the output to the input stages, decrease the output of the signal generator as much as possible. If possible, compare with a receiver known to be in good condition.

g. Check the wiring and soldering in each stage during the procedure.

Caution: Do not remove the shield assembly from any subassembly until the trouble has been traced to a specific subassembly. Do not damage the wiring by pushing it back and forth during inspection. Be careful not to damage the receiver in any way.

h. Misalinement of one or more stages of the receiver will cause reduced output. Misalinement of the v-f oscillator V4 may prevent any output.

i. When trouble is localized in a given stage, first test the tube if such a test is indicated; then measure the voltage; and finally, measure the resistances at the tube socket of that stage. All d-c voltage and resistance measurements are made to chassis ground.

Caution: Be sure that the receiver switch control arrangement for each check made is that given in the applicable figure (figs. 51 through 62).

j. Trouble in a circuit or stage may not cause changes in voltage and resistance measurements at the tube socket. The instructions included in this paragraph are merely a guide and should suggest other procedures, such as voltage and resistance measurements on individual parts.

k. Remove only *one* tube at a time when testing. Check the number of the tube, test the tube, and, if it is not defective, return it to its proper socket before another tube is removed.

l. At each step it is assumed that all previous steps were completed satisfactorily. Isolate and clear any trouble located before proceeding with any succeeding steps.

86. A-F Signal Substitution Tests

a. Pin 5 of V17 (Grid of A-F Power Amplifier). Apply an audio signal through a series capacitor (.01-uf) to pin 5 of V17 and adjust the signal generator output to a suitable level. Then, if necessary, apply the procedure outlined in the chart.

Test	Possible cause of weak or no signal output		
	Open circuit	Short circuit	Other
Listen for signal in headset, plug connected to the PHONES jack; or, listen for it in a loudspeaker connected to AUDIO OUTPUT terminals, if used.	E2, J3, or both secondary windings of T7.	C150, or contacts of the METER RF-AF switch S11.	
Then test tube V17			Defective tube V17.
Then check tube V17 socket terminal voltages, noting that if plate voltage is obtained at the pin 3 plate of V17, the primary of T7 is not open.			
Then check the V17 tube socket resistance from each tube pin whose voltage reading is abnormal, to possibly isolate fault to the circuit of V17.	Stage wiring, R98, or R99.	C149, C150, or C151. Note that when C150 is shorted, the tube socket resistance at the pin 3 plate of V17 is low due to the primary d-c resistance of T7 being shorted out (par. 83). (If resistance is low, remove one lead of C150 and check resistance across capacitor.) When C149 is shorted, a positive d-c voltage appears at the pin 5 grid of V17 (tube plate will glow.)	

b. Pin 2 of V16B (Grid of First A-F Amplifier). Apply the audio signal (par. 86*a*) to pin 2 grid of V16B, setting the AUDIO GAIN control R84 to maximum. The output signal should be much louder than when it was applied to pin 5 of V17. Adjust it to a comfortable level. Then, if necessary, apply the procedure outlined in the chart.

Test	Possible cause of weak or no signal output		
	Open circuit	Short circuit	Other
Listen for headset or loudspeaker signal.	C148 or C149; check by paralleling C148 with a .022-μf and C149 with a 5100-$\mu\mu$f capacitor.	Sheath on the pin 2 grid lead of V16, grounding the pin 2 terminal. PHONO terminal for Radio Receivers R–274A/FRR, R–320A/FRC and R–483/FRR is grounded, possibly by its sheath.	
Then test tube V16			Defective tube V16.
Then check tube V16B socket terminal voltages and resistances to possibly isolate fault to the circuit of V16B. Do likewise for V16A and clear any circuit fault, if found.	R81, R82, R83, or R84.	C148.	

87. I-F Signal Substitution Tests

Set the receiver controls as shown below.

Control	Setting
RF GAIN (R93)	Maximum.
AUDIO GAIN (R84)	Maximum.
IF GAIN (R211) (In Radio Receiver R–320A/FRC only).	Maximum.
MOD-CW (S7)	MOD.
AVC-MAN (Sg)	MAN.
LIMITER-OFF (S6)	OFF.
SELECTIVITY (S5A, B, C)	3 KC.
SEND-REC (S9)	REC.

a. Pin 1 of V11 (Grid of I-F Driver). Apply a modulated 455-kc i-f signal to pin 1 of V11 through a .01-μf capacitor, adjusting it to a comfortable level. Then, if necessary, apply the procedure outlined in the chart.

Test	Possible cause of weak or no signal output		
	Open circuit	Short circuit	Other
Listen for headset or loudspeaker signal. Then test tube V14	C139 or C143.		Defective tube V14.
Then check tube V14 socket terminal voltages and resistances to possibly isolate fault to the circuit of V14A and to clear any in the circuit of V14B.	R62, R63, C64, R65, R69, C141, or C142; also, R102 for Radio Receivers R–483/FRR, R–320A/FRC, and R–274A/FRR, and DIODE OUTPUT jumper at E3 for Radio Receivers R–320A/FRC, R–483A/FRR and R–274C/FRR.	C139. C138, which may also be grounded to chassis. Also C162 for Radio Receivers R–274C/FRR and R–483A/FRR.	
Then test tube V15			Defective tube V15.
Then check tube V15 socket terminal voltages and resistances to possibly isolate fault to the circuit of V15A and to clear any in the circuit of V15B.		Pin terminals of V15A or circuit to them may also be grounded.	
Then test tube V11			Defective tube V11.
Then check tube V11 socket terminal voltages and resistances to possibly isolate fault to the circuit of V11. Note that plate voltage at the pin 5 plate of V11 indicates that R59 and L47 are not open, and C129B not shorted.	R55, R56, R57, R58, or C129A, also R113 for Radio Receivers R–483A/FRR and R–274C/FRR.	C125, C126, C127, C128, or C129A.	

b. Bfo Buffer Amplifier V12 and Bfo Oscillator V13. Remove the modulation from the 455-kc i-f signal placed on pin 1 of V11 through the series capacitor. Set the receiver MOD-CW switch to CW and turn the BEAT OSC. control to a position on the scale other than its zero beat knob dial position. A tone signal should be heard in the headset. Then, if necessary, apply the procedure outlined in the chart.

Test	Possible cause of weak or no signal output		
	Open circuit	Short circuit	Other
Listen for headset or loudspeaker signal.		Sheath on pin 1 grid lead of V12 may be grounding pin 1 terminal.	
Then test tube V12			Defective tube V12.
Then check tube V12 socket terminal voltages and resistances to possibly isolate fault to the circuit of V12.	L46, R100, C135 or BFO INJ control R74.	C135.	
Then test tube V13			Defective tube V13.
Then check tube V13 socket terminal voltages. Continue with terminal resistances to possibly isolate fault to the circuit of V13.	MOD-CW switch S7, R76, R77, R75, L44, L45, C130, C131, C132, C133, C134, or C136.	C133, C134, C136, C130, C131, C132, L44, or L45.	L44 may be misalined. Tone output may be outside ±3-kc range.

c. Pin 1 of V10 (Grid of Second I-F Amplifier). Set the MOD-CW switch to MOD. Place the modulated 455-kc i-f signal through the series capacitor on pin 1 of V10. The output signal should increase in volume. Adjust it to a comfortable level. Then, if necessary, apply the procedure outlined in the chart.

Test	Possible cause of weak or no signal output		
	Open circuit	Short circuit	Other
Listen for headset or loudspeaker signal.	C125, C126, C123, C122, C121, R51, R52, the S5C section of SELECTIVITY switch, or the secondary of T5. Also C264 for Radio Receiver R–320A/FRC.	C 124.	
Then test tube V10			Defective tube. V10.
Then check tube V10 socket terminal voltages and resistances to possibly isolate fault to the circuit of V10.	Primary of T5, R51, R52, or R54; also R53 for radio receiver, all types, other than Radio Receiver R–274C/FRR from serial No. 1570: For Radio Receiver R–320A/FRC, if IF GAIN control does not function, L155.	C119, C120, C121, C122, or C123. For Radio Receiver R–320A FRC, if IF GAIN control does not function, C264 or C263.	If tube socket terminal voltages check normal, L41 or L42 of T5 may be misalined.

d. Pin 1 of V9 (Grid of First I-F Amplifier). Place modulated 455-kc i-f signal through the series capacitor on pin 1 of V9. The output signal should increase in volume. Adjust it to a comfortable level. Then, if necessary, apply the procedure outlined in the chart.

Test	Possible cause of weak or no signal output		
	Open circuit	Short circuit	Other
Listen for headset or loudspeaker signal.	C119, C120, C118, C116, C115, R50, the S5B section of SELECTIVITY switch, or secondary of T4. Also for Radio Receiver R–320A/FRC, C262.	C117.	
Then test tube V9			Defective tube V9.
Then check tube V9 socket terminals voltages and resistances to possibly isolate fault to the circuit of V9.	Primary of T4, R43, R44 or R49; also R48 for radio receiver all types, other than Radio Receiver R–274C/FRR from serial No. 1570. For Radio Receiver R–320A/FRC, if IF GAIN control does not function, L154.	C113, C114, C115, C116, or C118. For Radio Receiver R–320A FRC, if IF GAIN control does not function, C262.	If the tube socket terminal voltages check normal, L38 or L39 of T4 may be misalined.

e. Pin 1 of V7 (Grid of 455-kc I-f Gate). Switch the receiver for the single conversion position of S4 by indenting the BAND CHANGE control to the 1.35–3.45-mc frequency band. Place the modulated 455-kc i-f signal through the series capacitor to pin 1 of V7. The output signal should increase in volume. Then, if necessary, apply the procedure outlined in the chart.

Test	Possible cause of weak or no signal output		
	Open circuit	Short circuit	Other
Listen for headset or loudspeaker signal. Check to see that one arm contact of the S5A section of SELECTIVITY switch shorts out the Y8 crystal and that the other arm contact grounds one end of L37.	C113, C114, C109, C108, L37, R42, or the secondary of L36.	C107, C110, C111, or C112.	
Then test tube V7			Defective tube V7.
Then check tube V7 socket terminal voltages and resistances to possibly isolate fault to the circuit of V7. Note that screen voltage to pin 6 of V7 indicates S4 is closed in its single conversion position.	Primary of T3, R39, or R41. R34 for Radio Receivers R–483/FRR, R–274A/FRR, and R–320A/FRC. R53 for Radio Receiver R–274C/FRR from serial No. 1570. R112 for Radio Receivers R–483A/FRR and R–274C/FRR.	C102, C105, C108, or C109. C100 for Radio Receivers R–483/FRR, R–274A/FRR, and R–320A/FRC. C165 for Radio Receiver R–274C/FRR from serial No. 1570.	If the tube socket voltages check normal, L36 or L37 of T3 may be misalined.

f. Pin 7 of V5 (Grid of First Mixer). Place the modulated 455-kc i-f signal through the series capacitor on pin 7 of V5. The output signal should decrease slightly. Then, if necessary, apply the procedure outlined in the chart.

Test	Possible cause of weak or no signal output		
	Open circuit	Short circuit	Other
Listen for headset or loudspeaker signal.	C70, C68, R32 or R33, or the secondary of L32. C100 for Radio Receivers R–483/FRR, R–320A/FRC and R–274A/FRR. C165 for Radio Receiver R–274C/FRR, from serial No. 1570.	C69.	
Then test tube V5			Defective tube V5.
Then check tube V5 socket terminal voltages and resistances to possibly isolate fault to the circuit of V5.	L31 or L32 primaries of T1, or R31. Remove r-f strip (par. 90*e*) for R26, R27, or R28.	C70 Remove r-f strip (par. 90*e*) for C66, C68, C71, C72, or C73. C45 for Radio Receivers R–483/FRR, R–274A/FRR, and R–320A/FRC.	If the tube socket terminal voltages check normal, L32 may be misalined.
Then fully analyze r-f strip before replacement.			

g. Pin 7 of V6 (Grid of Second Mixer). Switch the receiver for the double conversion position of S4 by indenting the BAND CHANGE control to the 7.40- to 14.8-mc frequency band. Then, apply a modulated 3,955-kc i-f signal to pin 7 of V6 through a .01-μf capacitor. Adjust the signal heard to a comfortable level. Then, if necessary, apply the procedure outlined in the chart.

Test	Possible cause of weak or no signal output		
	Open circuit	Short circuit	Other
Listen for headset or loudspeaker signal.			No output from 3.5-mc oscillator V8.
Then test tube V8			Defective tube V8.
Then check tube V8 socket terminal voltages and resistances to possibly isolate fault to the circuit of V8.	L35, R36, R37, R38, C103, or C104.	C99, C103, C104, or crystal Y7.	
Then test tube V6			Defective tube V6.
Then check tube V6 socket terminal voltages and resistances to possibly isolate fault to the circuit of V6.	L34, R35, or R40	C98 or C106	Replace Y7 crystal.

h. Pin 7 of V5 (Grid of First Mixer). Place the modulated 3,955-kc i-f signal through the series capacitor on pin 7 of V5. The output signal should increase. Adjust it to a comfortable level. Then, if necessary, apply the procedure outlined in the chart.

Test	Possible cause of weak or no signal output		
	Open circuit	Short circuit	Other
Listen for headset or loudspeaker signal.	Secondary of L33	Secondary of L33, or C97. Then primary of L31, or C67.	
Then check for continuity between primary of L33 and secondary of L31.			Wiring between primary of L33 and secondary of L31. L34, L33, or L31 may be misalined. Alinement of L33 indicates C97 is not open.

88. R-F Signal Substitution

a. Pin 7 of V5 (Grid of First Mixer).

(1) Apply an r-f modulated signal, within the range of 7.40+to 14.8 mc, through a .01-μf series capacitor to pin 7 of V5. Set the receiver to approximately the frequency of the r-f source and turn the TUNING control for output in the headset. If it is impossible to obtain the modulation of the r-f signal, either the source of 4-f signal is not providing voltage on pin 7 of V5 or the v-f oscillator of the receiver is not functioning. To check for the latter case, repeat the procedure for each of the six frequency bands of the receiver, applying an r-f modulated signal, as instructed, within the frequency range applicable to the receiver band used. If one of the bands provides headset output, the r-f tuner v-f oscillator subassembly used on each band that provides no output should be replaced. Analyze each r-f tuner v-f oscillator subassembly external to the receiver to locate the defect or defective part in it. If headset output cannot be obtained on any one of the receiver frequency bands, the fault has been isolated to the v-f oscillator circuitry of the receiver contained in the r-f strip. Then apply the procedure outlined in the chart; be sure that Radio Receivers R–274A/FRR and R–274C/FRR have the XTALS switch at VFO and the B+ section of the S2 section of the switch is closed.

Test	Possible cause of weak or no signal output		
	Open circuit	Short circuit	Other
Test tube V4			Defective tube V4.
Then check C1G and C1H sections of main tuning capacitor C1.	C1G or C1H	C1G or C1H.	
Then follow disassembly procedure in paragraph 90*e*.	C71, C72, or C73, C74, or C75.	C74 or C75.	
Then check tube V4 socket terminal voltages and resistances to possibly isolate fault to the circuit of V4.	L24, R22, R29, or R30	L24, C71, C72, or C73.	
Then fully analyze r-f strip before replacement.			

(2) In the instance of Radio Receivers R–274A/FRR and R–274C/FRR, switch the XTALS switch to its 1, 2, 3, 4, 5, or 6 position whose associated crystal holder carries a crystal suited to a known signal frequency within the frequency range of the receiver. Set the receiver and the signal generator to the known signal frequency and then adjust the signal generator frequency control for maximum headset receiver output. If no output is obtained, try the procedure outlined for another crystal suited to the same or another signal frequency. If still no receiver output is obtained, apply the procedure outlined in the chart.

Test	Possible cause of weak or no signal output		
	Open circuit	Short circuit	Other
Test tube V3			Defective tube V3.
Then check tube V3 socket terminal voltages and resistances to possibly isolate fault to the circuit of V3; if so, noting which tube socket terminal readings are abnormal, and then disassembling the frequency control unit (par. 90*c*) from the receiver so that the defective circuit can be analyzed to isolate the defective part.	L21, L22, L23, R23, R24, R25, or S2, S3. When tube socket terminal voltages and resistances are all normal, check, C61, C62, C63, C64, C65, or circuitry of each.	C61, C62, C63, C64, or C65.	

b. Pin 1 of V2 (Grid of Second R-F Amplifier). Set the XTALS switch back to VFO. Apply an r-f modulated signal, within the range of any one of the six frequency bands of the receiver, through the series capacitor to the pin 1 of V2. Set the receiver to approximately the frequency of the r-f source and turn the TUNING control for output in the headset. If it is impossible to obtain the modulation of the r-f signal, repeat the procedure described above on each of the other frequency bands of the receiver. If the headset output does not result for any one of the receiver bands, the fault has been isolated to the second r-f stage circuitry contained in the r-f strip; if the headset output does result for any one of the receiver bands, then the procedure to follow is to replace the r-f tuner interstage subassembly, in a manner similar to that described in *a*(1) above for the r-f tuner v-f oscillator subassemblies. With the fault isolated to the second r-f stage circuitry contained in the r-f strip, apply procedure outlined in the chart.

Test	Possible cause of weak or no signal output		
	Open circuit	Short circuit	Other
Test tube V2			Defective tube V2.
Then check C1E and C1F sections of main tuning capacitor C1.	C1E, C1F, or R21	C1E or C1F.	
Then follow disassembly procedure in paragraph 90e.	C40, C42, C43, or C44		
Then check tube V2 socket terminal voltages and resistances to possibly isolate fault to the circuit of V2.	L14, R6, R12, R13, R14, R15, or R16. R114 for Radio receiver R–274C/FRR, from serial No. 487.	C19, C20, C21, C22, C23, C24, C40, C41, C42, or C43. C163 for Radio Receivers R–483A/FRR and R–274C/FRR. For Radio Receiver R–274C/FRR, from serial No. 487 C165, C166, or C167; but not C165, from serial No. 1570.	
Then fully analyze r-f strip before replacement.			

c. Pin 1 of V1 (Grid of First R-f Amplifier). Apply the modulated r-f signal through the series capacitor to pin 1 of V1 in a manner similar to the way in which it was applied to pin 1 of V2. If headset output does not result, replace the r-f tuner interstage subassembly with one known to be good. If headset output still does not result, the fault is isolated to the circuitry of V1 common to the six frequency bands of the receiver. Then apply the procedure outlined in the chart.

Test	Possible cause of weak or no signal output		
	Open circuit	Short circuit	Other
Test tube V1			Defective tube V1.
Then check C1C and C1D sections of main tuning capacitor C1.	C1C, C1D, or R11	C1C or C1D.	
Then follow disassembly procedure in paragraph 90*e*, and check tube V1 socket terminal voltages and resistances to possibly isolate fault to the circuit of V1.	L7, R1, R2, R3, R4, R5, or R6.		
Then check C18, C1A, and C1B, both for short and open circuits.			

d. Antenna Input Connector J1. Apply the modulated r-f signal to the ANT input connector J1 through a 100-ohm series resistor. If the headset output is very weak, replace the r-f tuner antenna subassembly with one known to be good. If the headset output is still weak, check for continuity between the two contacts of the connector J1 and between each and chassis ground for infinite resistance.

89. Stage Gain Charts

The stage gain data given in this paragraph are used to localize trouble to a stage when the stage is not operating properly. Stage gain data are provided in the form of a chart with regard to the i-f and a-f stages as well as for the r-f stages of the receiver. In the r-f stages, any stage gain measurements made without regard to the overall sensitivity of the receiver are solely for purposes of determining whether the circuitry of the r-f strip (common to all the six frequency bands of the receiver) is normal. As such, the stage gains of the V1 and V2 r-f amplifiers are made for the .54- to 1.35-mc frequency band of the receiver so that the miniature tube adapters used to get at the pin 1 grids of V1 and V2 provided for a minimum disturbance to the circuitry of each. To do this, make sure that the two identical r-f tuner interstage and v-f oscillator subassemblies for the .54- to 1.35-mc band 1 of the receiver are known to be normal.

a. Radio Receiver A-F and I-F Stages. The stage gain chart lists the approximate signal input voltages required at each of the i-f and a-f stages of the receiver to produce a signal output of 667 mw (equivalent to 20 volts measured by an a-c vtvm across an output load of 600 resistive ohms connected across the AUDIO OUTPUT terminals of the receiver). The i-f signals are modulated 30 percent at 400 cps. All signals are applied to the tube grids through a .01-μf capacitor. The receiver SELECTIVITY switch is set at 3 KC, the AVC-MAN switch to MAN, and the MOD-CW switch to MOD. The RF GAIN and the AUDIO GAIN controls, and the IF GAIN control with regard to Radio Receiver R–320A/FRC are turned to their maximum clockwise positions. Use the chart to provide approximate indications when trouble-shooting, and to check the gain of the receiver with regard to each i-f, a-f, or groups of these stages. When the receiver output is low, and the tubes are working satisfactorily as indicated by a tube tester, localize the defective stage by checking the signal voltage level of each stage against the chart. Use the signal substitution method of troubleshooting; that is, measure the individual stage gains in the sequence listed on the chart, which is backward through the receiver.

Receiver band	Frequency	Signal generator connection to receiver	Approximate signal generator input to radio receivers	
			R-483/FRR R-320A/FRC R-372A/FRR	R-183A/FRR R-274C/FRR
Any	400 cps af	Pin 5, V17	3.5 v	5.5 v.
Any	400 cps af	Pin 2, V16B	0.3 v	0.5 v.
1.35–3.45 mc	455-kc i-f mcw	Pin 1, V11	0.35 v	0.6 v.
1.35–3.45 mc	455-kc i-f mcw	Pin 1, V10	6,000 uv	15,000 uv.
1.35–3.45 mc	455-kc i-f mcw	Pin 1, V9	110 uv	300 uv.
1.35–3.45 mc	455-kc i-f mcw	Pin 1, V7	40 uv	75 uv.
1.35–3.45 mc	455-kc i-f mcw	Pin 7, V5	65 uv	90 uv.
7.40–14.8 mc	3955-kc i-f mcw	Pin 7, V6	250 uv	180 uv.*
7.40–14.8 mc	3955-kc i-f mcw	Pin 7, V5	40 uv	70 uv.

*For Radio Receiver R-274C/FRR, from serial No. 1570, this input is 100 uv.

b. Radio Receiver R-f Stages. The stage gain data given for the i-f stages of the receiver provide some indication with regard to the stage gains of each of the r-f amplifier stages V1 and V2. Having first determined that the receiver stage gain indication at pin 7 of the V5 mixer is normal, apply a modulated r-f signal generator input through the .01-μf series capacitor to this same pin 7 of V5 and note the signal generator uv input to produce the 667-mw output. Make sure that the signal frequency used is within the frequency range of band 1, as explained above. Then supply the modulated r-f signal through the series capacitor to the pin 1 grid of V2 (the second r-f amplifier) and tune the receiver. To provide the reference level output of 667 mw, the signal generator input to the receiver should be decreased so that the stage gain for V2 approximates that indicated in the chart. To check the stage gain of V1 (the first r-f amplifier) apply the modulated r-f signal to pin 1 of V1, and retune the receiver. Again, to provide the 667-mw receiver output, the signal generator input to the receiver should be decreased so that the stage gain for V1 also approximates that indicated in the chart. To check the antenna input coupling gain, apply the modulated r-f signal to the V1 antenna input connector, and retune the receiver. Again, for the 667-mw output, the signal generator input should be decreased so that the gain approximates that indicated in the chart.

Receiver band	Frequency	Stage	Stage gain
0.54–1.35 mc	Any, mcw	V2	3–5.2.
		V1	2.5–5.5.
		Antenna	9–13.

Section II. REPAIRS

90. Replacement of Parts

Most of the parts in the radio receiver are accessible and are easily replaced if found to be faulty. However, the removal of certain subassemblies is required to replace the parts they contain. Also, the removal of certain parts such as wired assemblies simplifies the resoldering needed to replace the part. To render accessible the circuitry and parts in the receiver chassis under the SELECTIVITY switch assembly, the switch first must be removed. Otherwise, any of the receiver subassemblies and parts may be removed in any sequence desired for the replacement of a specific part.

a. R-F Tuner Subassemblies (figs. 76 through 78). To replace any part in any one of the four r-f tuner subassemblies used on a specific frequency band of the receiver, indent the turret assembly by the BAND CHANGE control so that the r-f tuner subassemblies for the specific band show fully in the opening provided by the removal of the tuning unit shield at the bottom of the receiver chassis. Remove the r-f tuner subassembly to be repaired by removing each of the two flat springs that hold it in place at either end of its isolantite base. To remove a flat spring grasp it at its inward full length edge with a pair of long-nosed or special pliers (fig. 19) and then press downward while pulling inward with a circular motion to remove it.

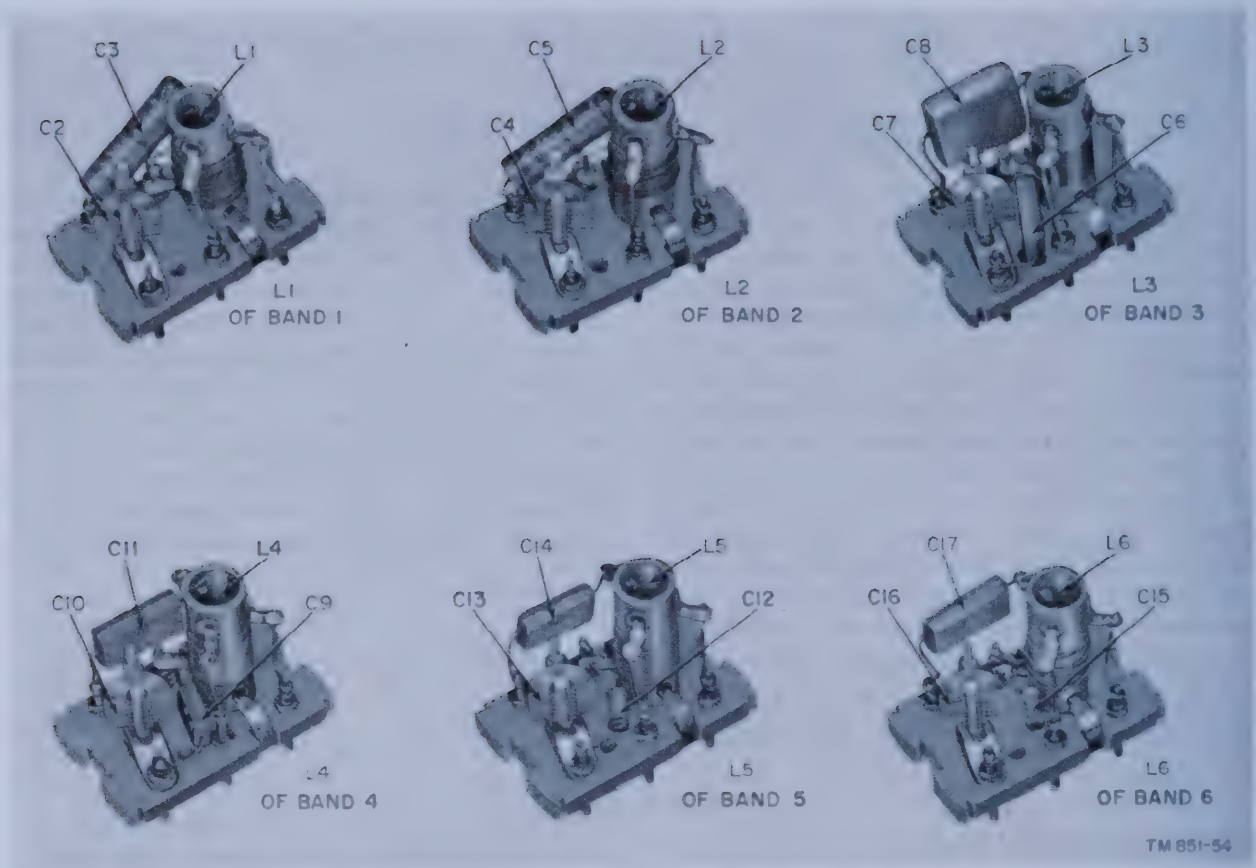

Figure 76. Radio receiver, all types, antenna r-f tuner subassemblies for bands 1 through 6.

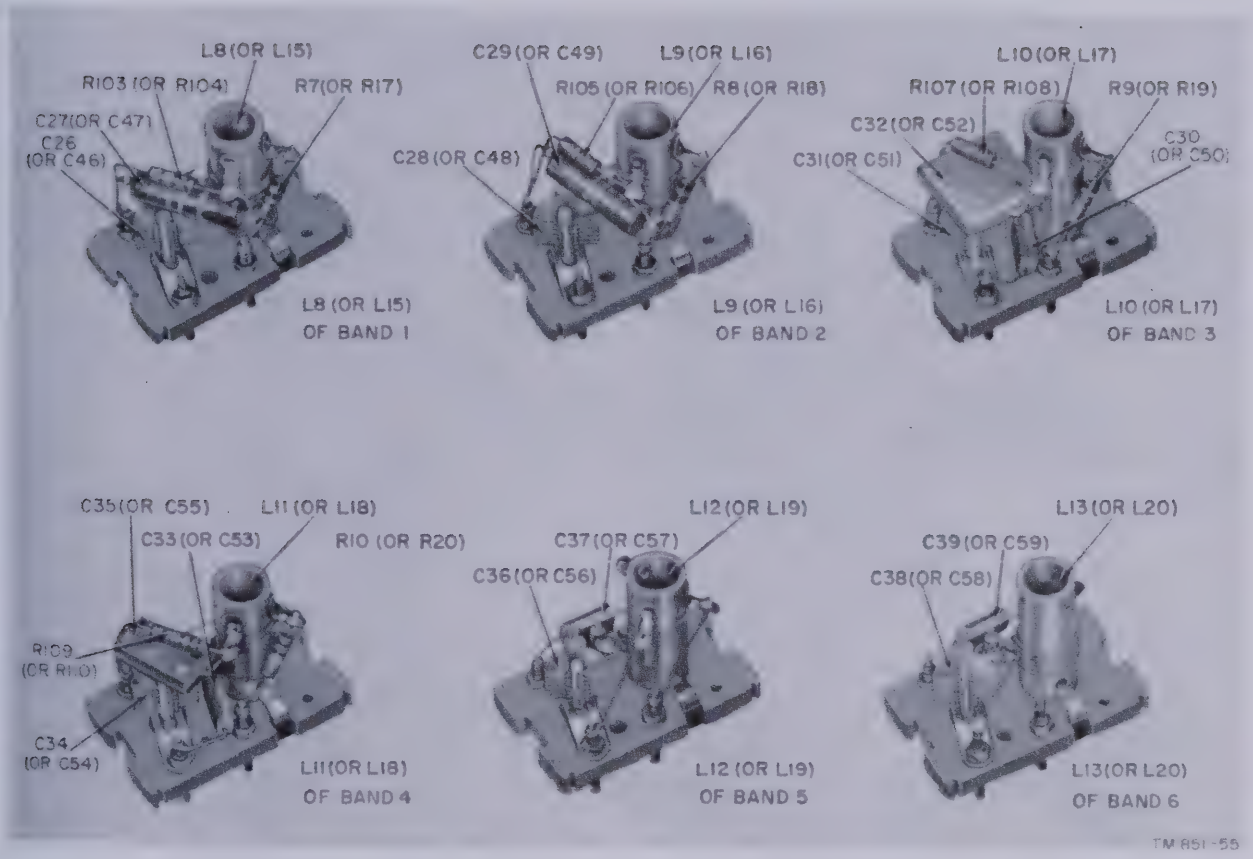

Figure 77. Radio receiver, all types, interstage r-f tuner subassemblies for bands 1 through 6.

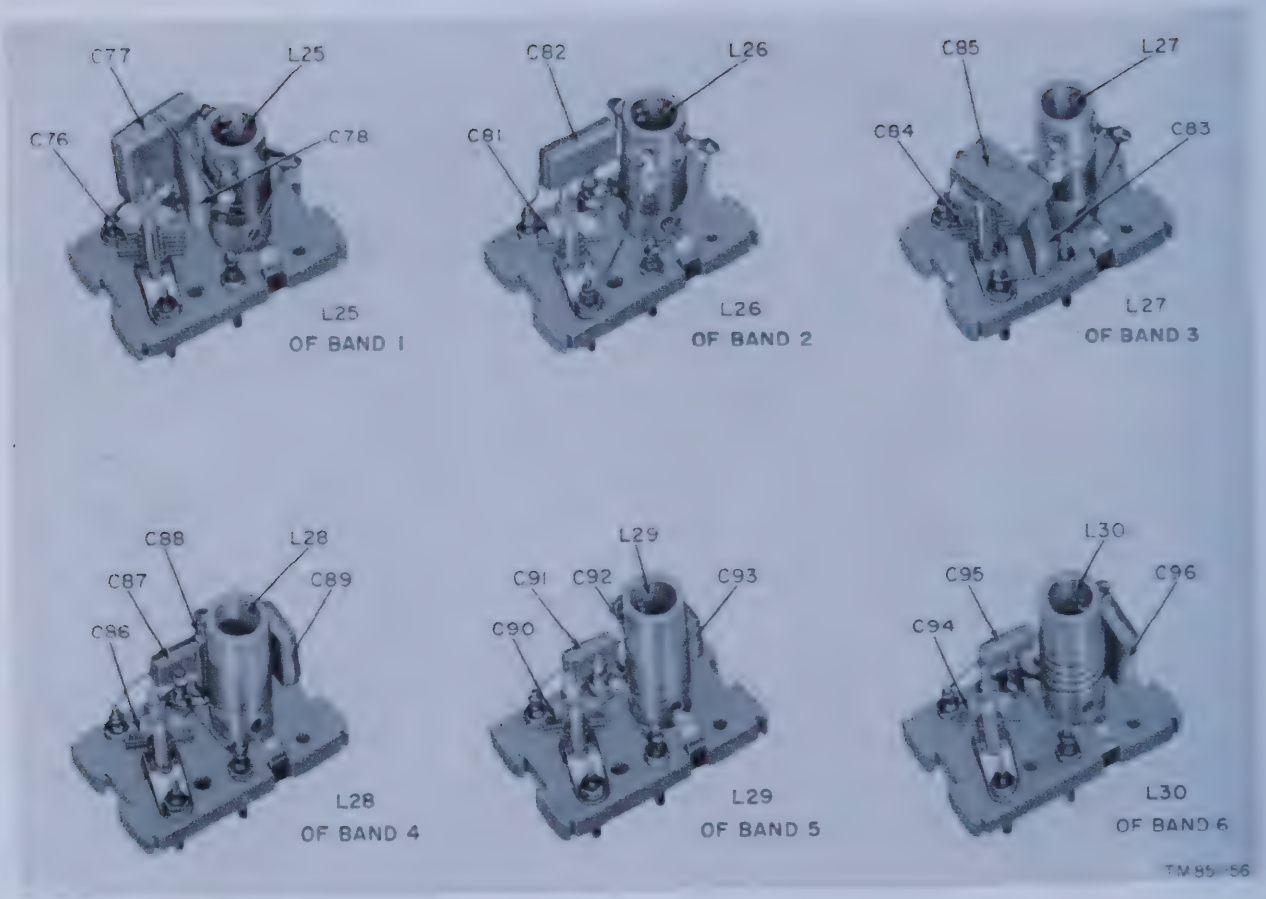

Figure 78. Radio receiver, all types, oscillator r-f tuner subassemblies for bands 1 through 6.

b. Shielded Subassemblies (figs. 79 through 83). To replace any part in the T2, T3, T4, T5, T6, and T9 subassemblies, first remove the subassembly shield can by removing the two or four No. 6–32 machine screws that hold it in place. Then unsolder the externally connected leads to the subassembly. To remove the subassembly for repair, remove the two No. 6–32 machine screws that mount it to the receiver chassis. To remove the bfo subassembly (T6), loosen the four setscrews on the flexible coupling. In Radio Receivers R–274A/FRR and R–274C/FRR, the frequency control unit extension shaft for S2 must be removed first before the shield can and the bfo subassembly can be removed.

c. Frequency Control Unit (fig. 84). To replace any part in the frequency control unit of Radio Receiver R–274A/FRR or R–274C/FRR, follow the procedure below, in sequence:

(1) Unsolder black, black/white, blue/red, and red/white leads from terminal board E13 (fig. 68) and the solid red lead from filter capacitor C161 (fig. 70).

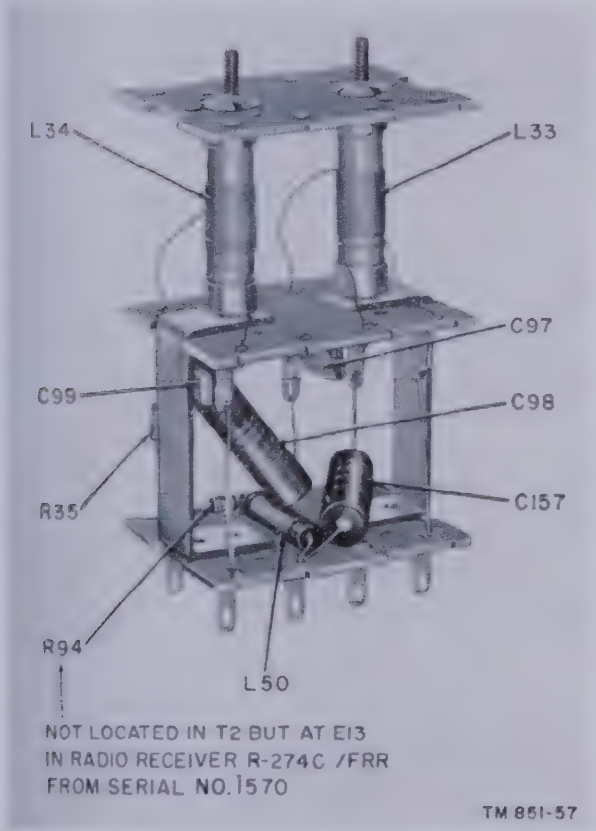

Figure 79. Radio receiver, all types, 3955-kc. i-f transformer subassembly T2.

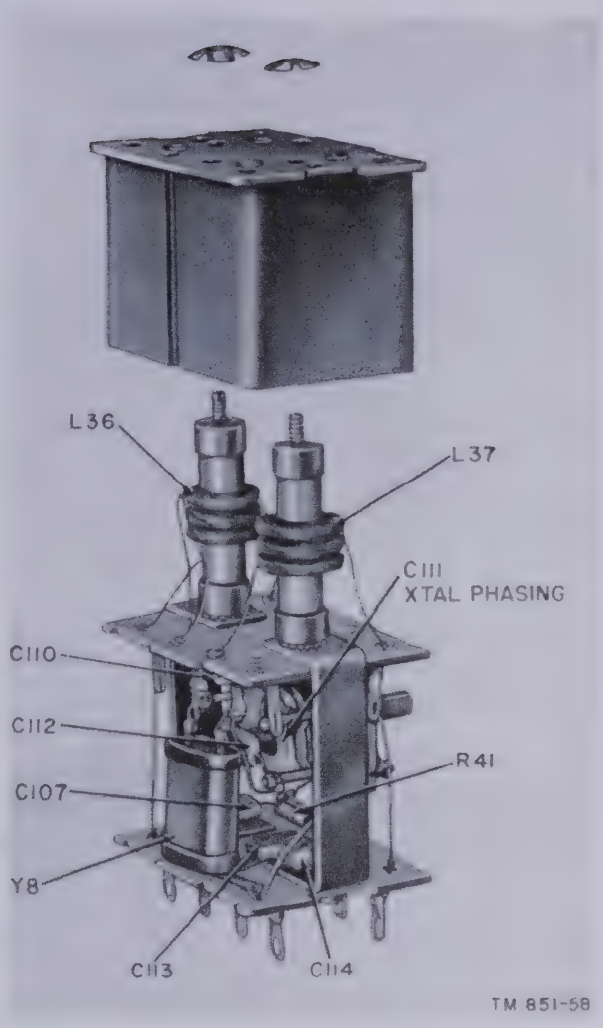

Figure 80. Radio receiver, all types, i-f filter circuit transformer subassembly T3.

(2) Remove the front panel XTALS switch knurled knob.

(3) Disconnect the Δ FREQ control flexible coupling.

(4) Loosen the two No. 6–32 setscrews in the XTALS switch shaft arm eccentric drive.

(5) Loosen the four No. 8–32 setscrews to disconnect the XTALS switch fixed coupling.

(6) Unsolder capacitor C60 at the VFO-XTALS switch.

(7) Remove the supporting bracket, No. 8–32 nut, and washer from the stud adjacent to B+ filter choke L52.

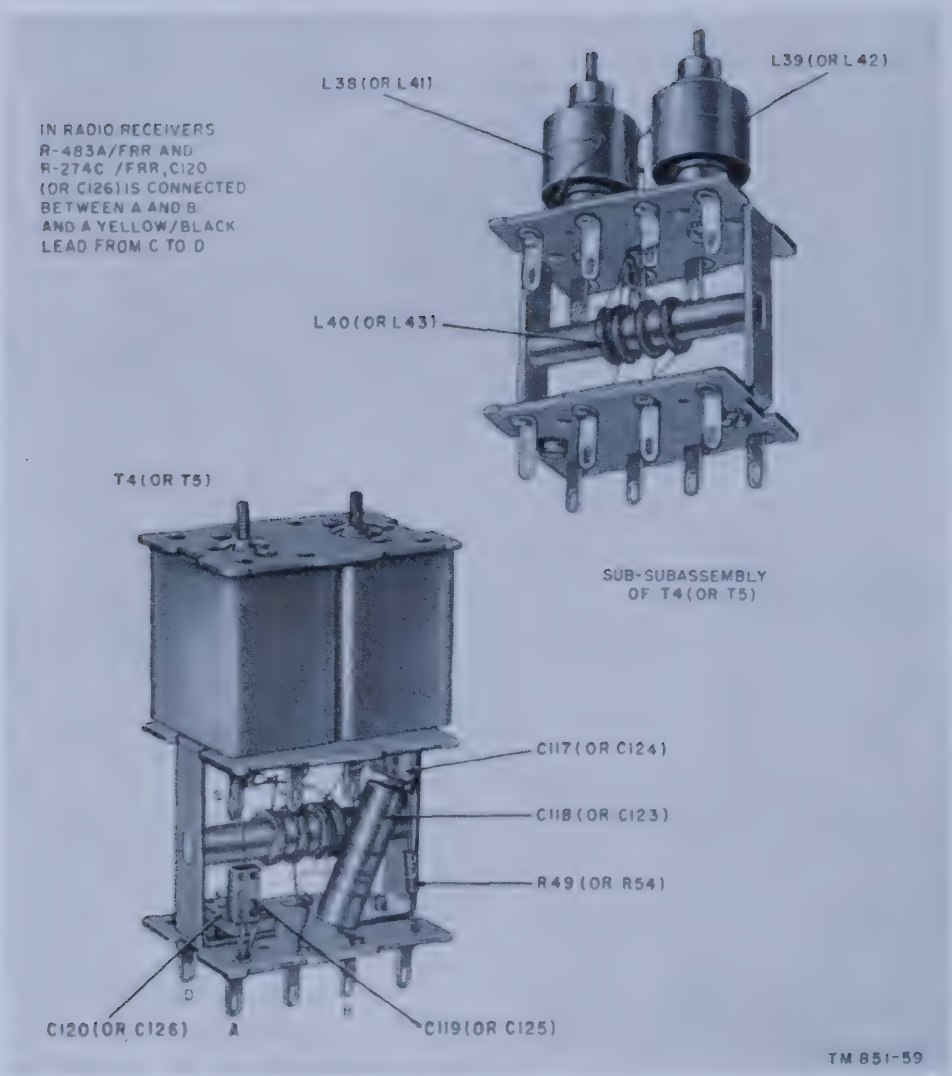

Figure 81. Radio receiver, all types, i-f transformer subassembly T4 (or T5).

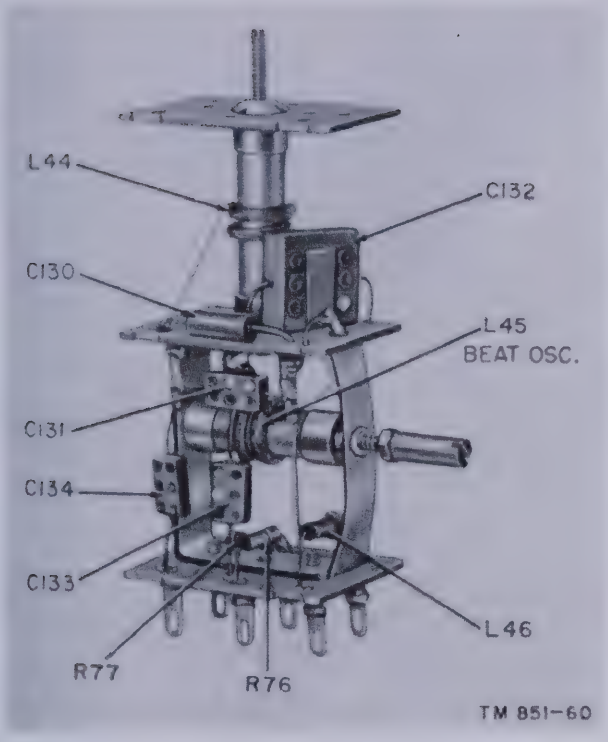

Figure 82. Radio receiver, all types, bfo subassembly T6.

(8) Remove the four No. 8–32 mounting screws from the bottom of the chassis to lift out the frequency control unit.

Note.—When replacing the repaired unit, set switches S3 and S2, comprising the VFO-XTALS switch, fully clockwise and to the first crystal position, before tightening the S2 fixed coupling and the S3 eccentric drive. Locate S2 eccentric drive to the drive end of its groove, back it up slightly, and tighten. Make sure the arm of the eccentric drive is normal to the shaft of S3 which it drives.

d. First Mixer Subassembly (fig. 85). To replace any part in first mixer subassembly T1 in Radio Receivers R–274A/FRR and R–274C/FRR, first remove the frequency control unit as described in *c* above; then continue as follows in all types of the receiver.

(1) Remove the chassis side shield by removing the ten No. 10–32 and two No. 6–32 screws from the side, and the four No. 10–32 screws on the front panel.
(2) Remove the two No. 6–32 cap nuts tc remove the mixer cover.
(3) Remove the six No. 6–32 screws to remove the mixer shield.
(4) Unsolder all ten leads at the top terminal board and all five leads at the bottom terminal board of the mixer subassembly.
(5) Remove the four No. 6–32 screws to remove the mixer subassembly.

e. R-F Strip (fig. 86). To replace any part in the receiver r-f strip, remove it in the following manner:

(1) Remove the ten No. 6–32 screws to remove the top shield from the tuning unit assembly.
(2) Unsolder the twelve bus leads from the r-f strip and the four ground straps from the main tuning capacitor.
(3) Remove the first mixer transformer (T1) cover by removing the two No. 6–32 cap nuts.
(4) Unsolder the blue, blue/red, top white/black, top red/green, red/white, and yellow/black leads from the r-f strip.
(5) Unsolder the bare wire from the r-f strip to the XTALS switch.

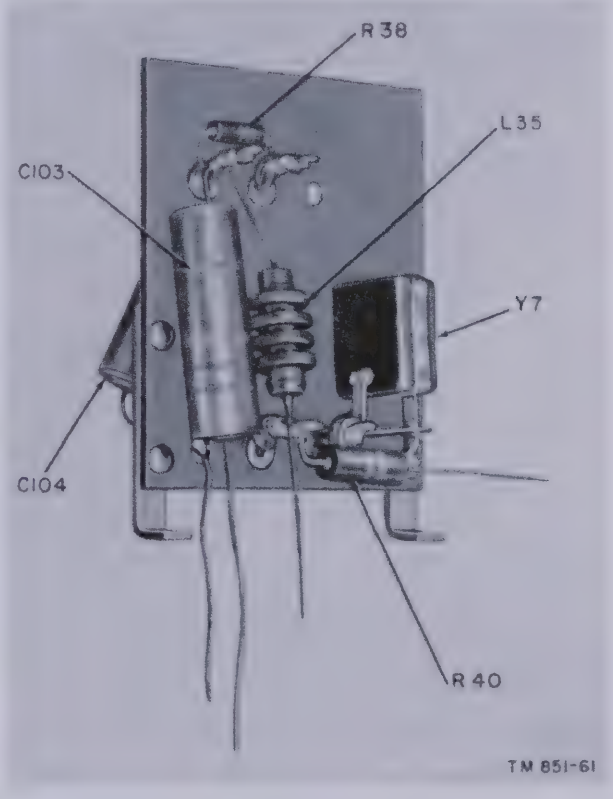

Figure 83. Radio receiver, all types, 3.5-mc crystal oscillator subassembly T9.

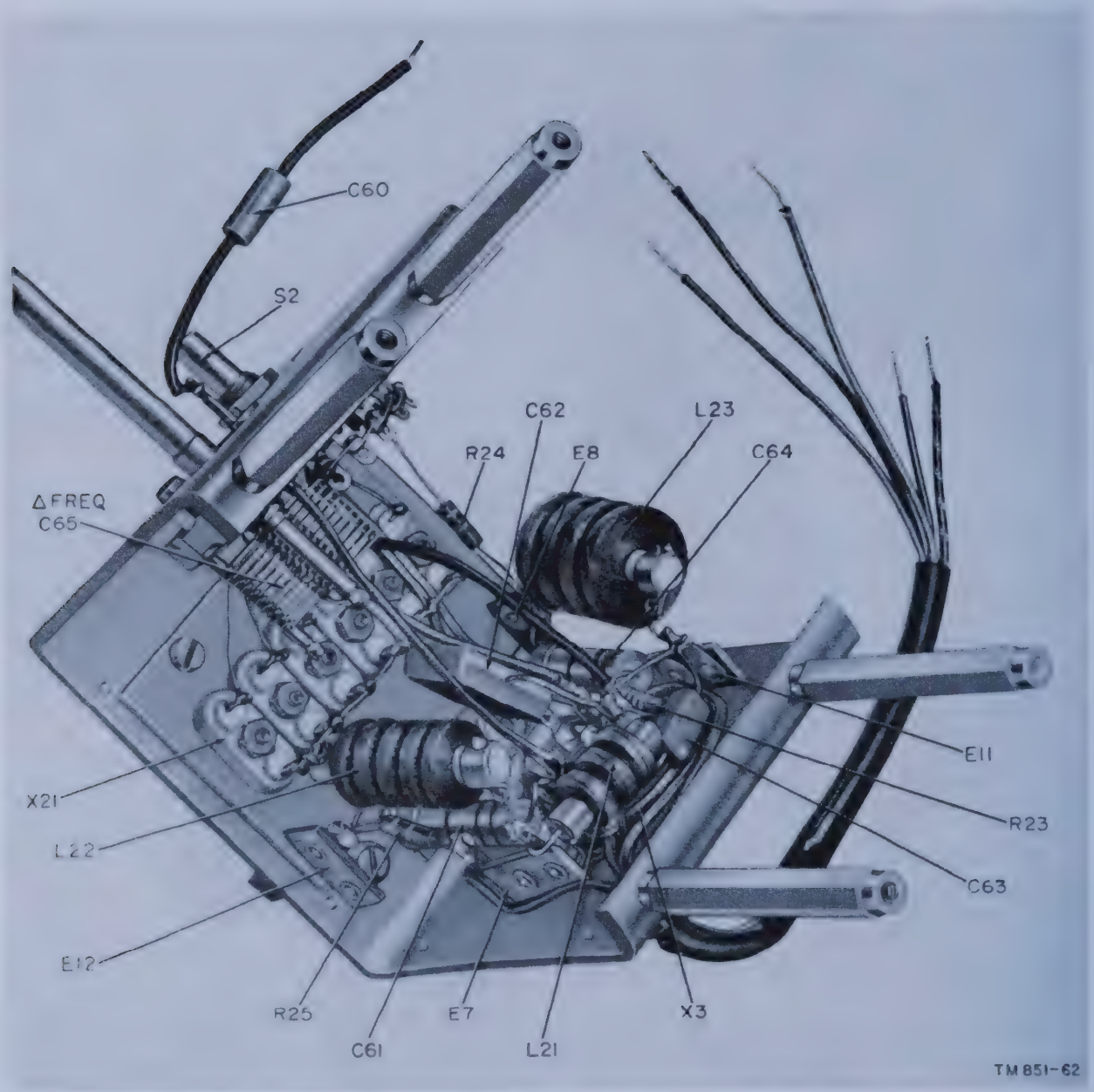

Figure 84. Radio Receivers R-274A/FRR and R-274C/FRR, frequency control unit, internal view, shield cover removed.

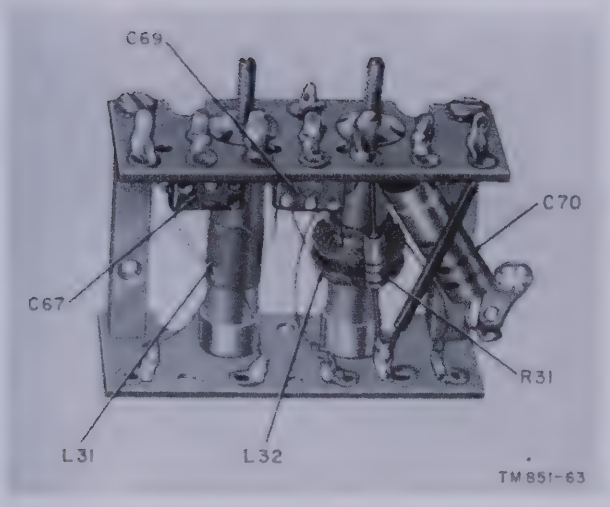

Figure 85. Radio Receiver, all types, first mixer i-f transformer subassembly T1.

(6) Turn the front panel, BAND CHANGE control exactly half-way between indentations—that is, between two band positions, and hold it in this position.
(7) Remove the four No. 6–32 screws from the top of the r-f strip.
(8) Remove the four No. 6–32 screws from the side of the r-f strip.
(9) Lift out the r-f strip

f. Main Tuning Capacitor. To replace the main tuning capacitor, mesh the capacitor fully and then follow the procedure below in sequence.

(1) Unsolder the twelve bus leads from the r-f strip and the four ground straps from the main tuning capacitor.
(2) Remove the loop spring and the link arm from the main tuning capacitor rotor arm (par. 92).
(3) Remove one No. 10–32 screw and spacer from the front mounting plate.
(4) Hold the capacitor by its frame and remove one No. 10–32 screw and stud from the rear of the tuning unit.
(5) Move the capacitor to the rear to clear the dowel pins and lift out the capacitor.

Caution: Never attempt to repair a removed main tuning capacitor.

Note.—When replacing the main tuning capacitor, the main dial pointer must line up with the first line marking on the main dial when the capacitor is meshed fully. This may necessitate the mounting readjustment of the main dial. The receiver front panel assembly must be removed to get at the main dial mounting screws.

g. Front Panel Assembly. If it is necessary to remove and replace the front panel assembly, follow the procedure outlined in (1) through (6) below:

(1) Remove the BEAT OSC., RF GAIN, TUNING, BAND CHANGE, and AUDIO GAIN control knobs at the front panel.
(2) Remove the nuts on all toggle switches and on the PHONES jack in front panel.
(3) Remove the ten No. 10–32 front panel mounting screws and washers.
(4) Disconnect all four flexible couplings to the front panel shafts.
(5) Remove the meter terminal strip from its meter terminal mounting.
(6) Remove the front panel assembly to readjust the main dial (par. 91*h*).

h. Main Dial. If it is necessary to readjust the location of the main dial when a new main tuning capacitor is used, first remove the front panel assembly (*g* above). Then loosen the three flathead main dial mounting screws to relocate the main dial, so that, with the main capacitor fully meshed, the main dial frequency pointer lines up with the main dial first line marking.

i. Isolantite Switch Bases. To replace any one of the four isolantite switch bases of the BAND CHANGE switch S1 in the r-f strip, remove each one with the bare electrical wires, resistors, and capacitors soldered to each, as applicable (*e* above).

Caution: When replacing any one of the isolantite bases, be sure that it is resoldered into place so that it is in proper alinement with each of the other bases on the r-f strip. To do this, use a straightedge or the locating template (fig. 88) comprising a lineup bar and small and large locating pins. Seat the isolantite base being replaced on the r-f strip and then insert the four small and four large locating pins in the lineup bar located over four of the isolantite bases, those soldered to the r-f strip providing for locating that being replaced. Make sure all four bases seat in the same plane when all the pins are inserted properly through the template bar and into the small and large holes in the bases.

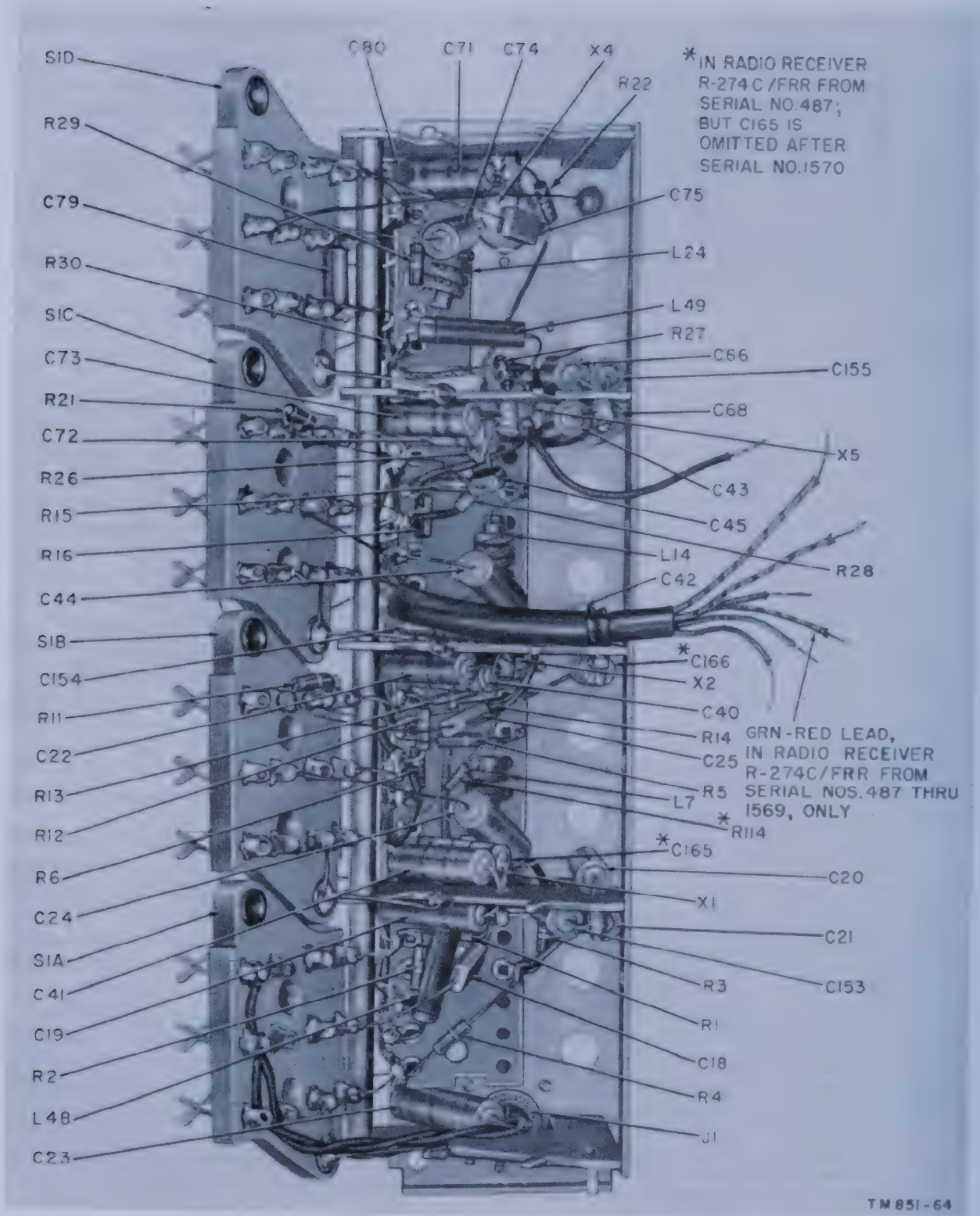

Figure 86. Radio receiver, all types, r-f strip subassembly, exploded view.

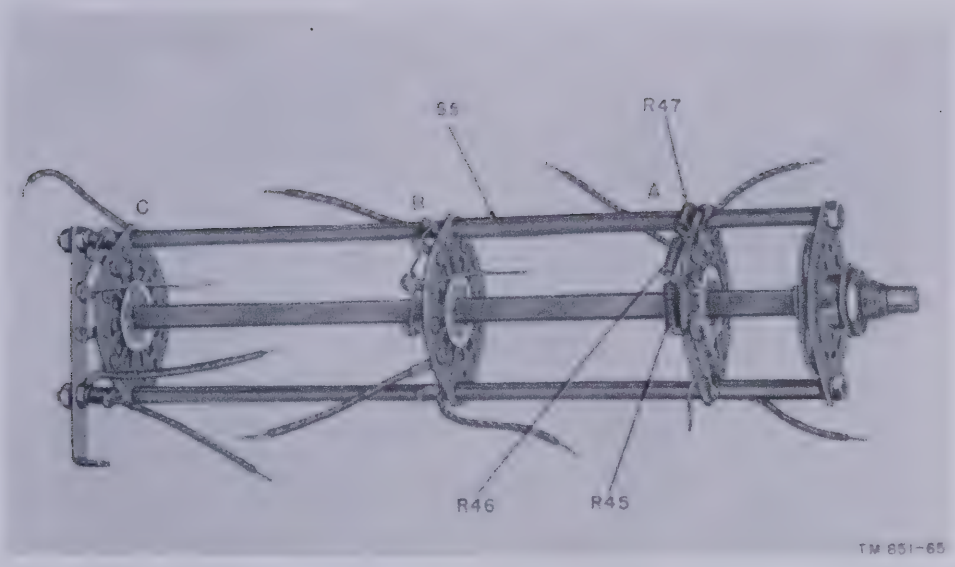

Figure 87. Radio receiver, all types, SELECTIVITY switch subassembly.

91. Replacement, Cleaning, and Lubrication of Functioning Mechanical Parts

The functioning mechanical parts of the radio receiver are located in the gear-train assembly, which, together with the r-f strip, main tuning capacitor, first mixer subassembly T1, and 24 r-f tuner subassemblies, comprises the removable tuning unit assembly of the radio receiver. The gear-train assembly includes the mounting disk and shaft assembly and the tuning unit shield assembly. To replace a functioning mechanical part in the gear-train assembly, proceed in the following manner:

a. Disassembly of Tuning Unit Assembly (fig. 89).

(1) Remove the radio receiver cabinet, or top cover and bottom plate, as applicable, from the receiver chassis and panel assembly.

(2) Remove the front panel control knobs, the front panel assembly (par. 90g), and the frequency control unit switch arm and eccentric drive assembly in Radio Receivers R–274A/FRR and R–274C/FRR.

(3) Strip the main dial indicator and mounting, and both main and vernier dials from the receiver chassis and tuning unit assembly.

Note.—Stop the procedure at this point unless the intent is to get at the gear-train assembly apart from the gear-train mechanism, now accessible.

(4) Unsolder two green/white leads, one each from terminal boards E14 (fig. 70) and E17 (fig. 68); two blue/black leads from i-f transformer assembly T2 (fig. 66); white/black, red/white, blue/red, yellow/black, and red/green leads from terminal board E13 (fig. 68); and two red/green, the green/red, and yellow/red leads of the main wiring cable from single-double conversion switch S4 (fig. 67), as applicable.

(5) Remove two No. 10–32 screws and one stud post assembly on either side of the tuning unit assembly, which screw into the nut plate brackets through clearance holes in the gear-train plate and chassis proper.

(6) Remove one No. 10–32 screw in the angle bracket on the rear of the tuning unit assembly that passes through the clearance hole at the back of the chassis proper, and then lift out the tuning unit assembly.

b. Disassembly of Gear-Train Assembly (fig. 90). Disassemble the gear-train assembly to the extent required to replace a faulty part. The number following each item below represents the callouts on figure 90.

(1) Remove the indicator slide helical spring (2), conversion switch helical spring (3), and two band change helical springs (5).

(2) Remove the conversion switch lever assembly (4) and the band change cam detent roller and lever assembly (6).

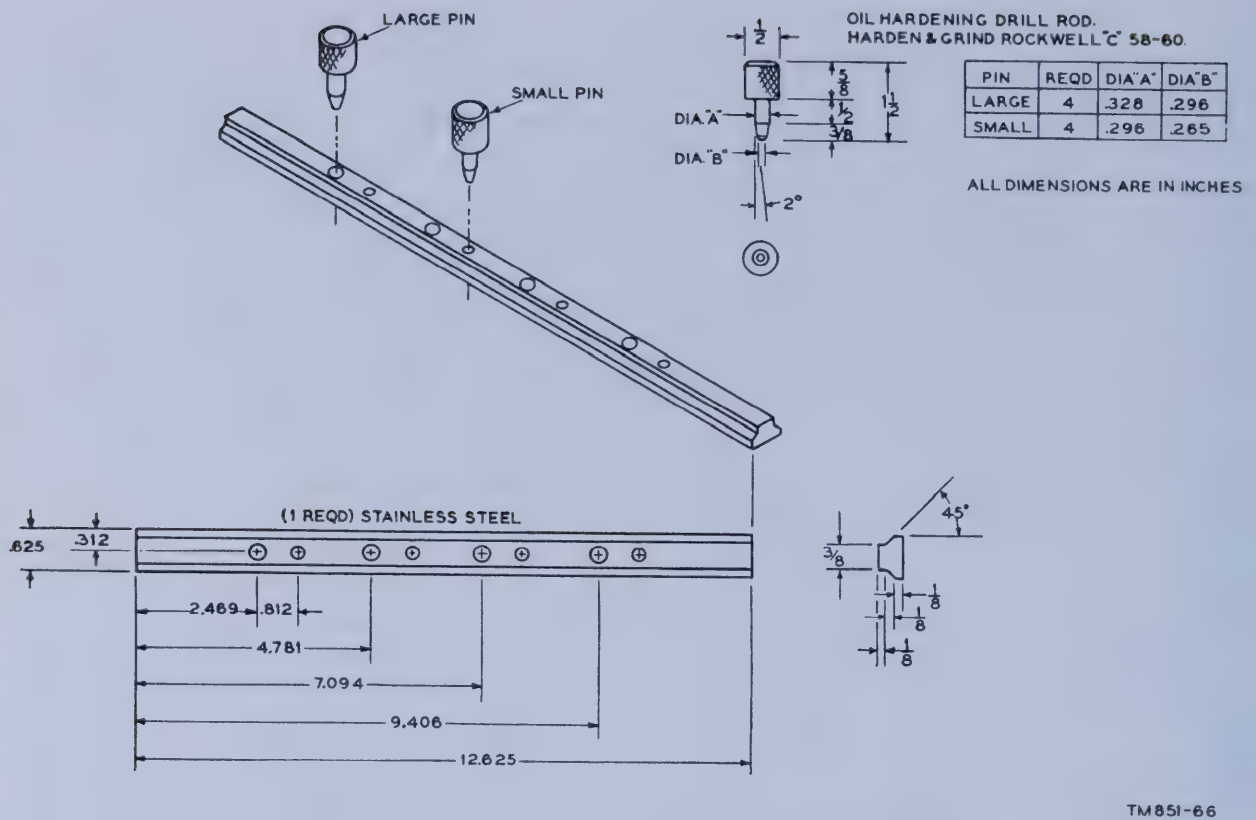

Figure 88. Radio receiver, all types, switch base, locating template.

(3) Remove the cam, hub, and band change dial assembly (1).

(4) Remove the bottom screw of the three No. 10–32 screws (11) used to mount the three mounting posts (7) and the two No. 8–32 screws (12) used to mount the bearing plate (9). This provides for the replacement of the flywheel (22), gear assembly (24) and cam (25) mounted on it, the movable support main pointer bracket (15), and the following:

(*a*) The two spur-type gear assemblies (26) at the spider assembly at the top right side of the base plate assembly (43), and the spur-type gear (27), with included stop pin.

(*b*) The spur-type gear (28) at the top left side of the base plate assembly (43) and the main dial hub spur-type gear (29) adjacent to it.

(*c*) The gear assembly (31), which includes two spur gears mounted on a small brass plate.

(5) Remove the two top screws of the three No. 10–32 screws (11) used to mount the three mounting posts (7). This provides for the replacement of the shaft, gear, and hub assembly (16), the two ball bearings (20), the idler wheel (23), the gear and drive pin assembly (21), and the following:

(*a*) The spur-type gears (38) and (37).

(*b*) Then, the rotor assembly front bearing hub (36) and the machine screw (42) at the rear of the rotor assembly, so that the mounting disk and shaft assembly (35) can be lifted out.

(6) Remove the No. 6–32 screws to separate the base plate (43) from the tuning unit shied assembly (45).

c. Cleaning and Lubrication of Gear-Train Assembly. The gear-train assembly may be cleaned and lubricated while in the tuning unit assembly which still is assembled to the chassis and panel assembly. Depending on the accumulation of dust and dirt, it may be necessary to remove the front panel assembly (par. 90*g*). If the front panel assembly has been removed and it is evident that the gear-train assembly must be disassembled, remove the tuning unit assembly (*a* above) and

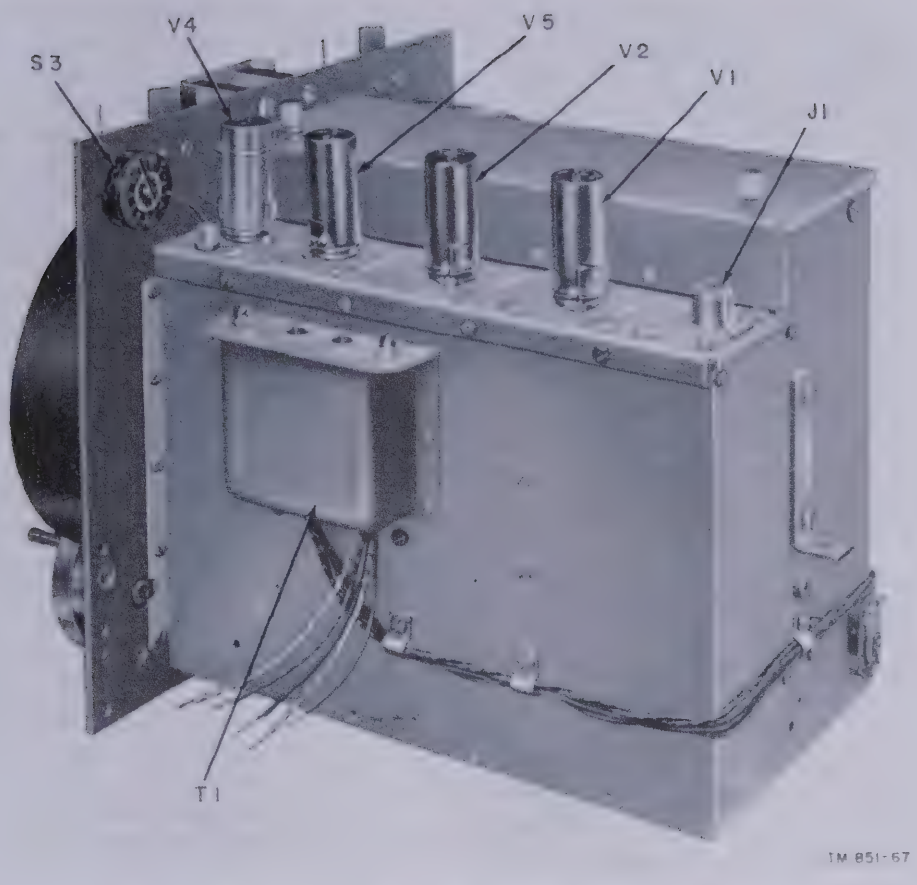

Figure 89. Radio receiver, all types, tuning unit assembly, ready for replacement, apart from switch S3 shield, as applicable.

continue (*b* above) to disassemble the gear-train assembly. All mechanical parts may be cleaned by brushing with solvent SD or Kerosene, Federal Specification VV–K–211b. To remove corrosion, use No. 000 sandpaper, and wipe dry with a clean, lint-free cloth. Dirty gears are cleaned best with a pipe cleaner or small brush dipped in the cleaning fluid. If cleaning necessitates the removal of grease, replace this with Grease, Military Specification MIL–G–3278. The grease is applied to the front bearing hub (36, fig. 90), rear bearing machine screw (42), and two ball bearings (20); also, to the five tempered shafts on the base plate assembly (43), the shaft of the flywheel (22), the shaft of the gear assembly (16), and to the shaft of gear assembly (24) at the bearing location of each.

d. Reassembly of Gear-Train Assembly. Reassemble the gear-train assembly in the manner described below. Start with the step sequence applicable, depending on the extent of the disassembly. The reassembly should be performed only by qualified field maintenance personnel who are familiar with the full procedure to be followed, before attempting any part of it.

(1) Reassemble the tuning unit shield assembly (45, fig. 90) to the base plate assembly (43).

(2) Reassemble the mounting disk and shaft assembly (35) to the tuning unit shield and base plate assembly by locating the curved washer (41) on the large nut at the front end and then seating the combination into the assembly.

Note.—The eight mounting disks are each provided with a locating hole which are meshed for alinement when assemblying the mounting disk and shaft assembly (35). A trued $\frac{3}{16}$-inch diameter steel lineup rod 12 inches long is used for this purpose.

(3) Add the front bearing hub (36) to the front end of the mounting disk and shaft assembly (35), using three No. 8 32 screws (40) and three split lockwashers

(39); also, add the machine screw (42) which acts as the rear bearing.

Note.—Make sure that curved washer (41) is centered on the large nut at the front end of the assembly (35) before tightening the two bearings. Lubricate both bearings (c above).

(4) Use the lineup rod ((2) above) to line up mounting disk and shaft assembly and tuning unit shield and base plate assembly. Use the alinement holes in each, so that the conversion switch cam at the rear of the mounting disk and shaft assembly is in its high position when the switch blade of conversion switch S4, assembled to the tuning unit shield assembly, shorts its center fixed contact to its fixed contact closest to the edge of the tuning unit shield assembly.

(5) Add the two loop-type springs (44); also the anchor plate (33), using the two No. 6–32 screws (8).

(6) Add to the hub (36) the large spur-type gear (37) and the small spur-type gear (38), using the three No. 8–32 screws (40) and the three split lockwashers (39). Add the gear assembly (31), using the two No. 6–32 screws (32), to the bottom left side of the base plate assembly (43), but do not tighten.

(7) Add the three mounting posts (7), using the three No. 10–32 screws (11).

(8) Add the gear assembly (21) as follows: Locate one ball bearing (20) at the base plate assembly (43) and lubricate with grease. Locate the other ball bearing (20) at the bearing setscrew (18) mounted on the bearing plate (10) by the No. 1/4–32 nut (19); lubricate with grease. Then, mount the gear assembly by mounting the bearing plate (10) carrying the grease-lubricated, loosely mounted gear assembly (16) to the two top posts (7), using the two No. 10–32 screws (11).

(9) Lubricate with grease the five tempered shafts of the base plate assembly (43).

(10) Locate the drive pin assembled to the gear assembly (21) so that it is at the top of the slot in the base plate assembly (43). Add the two spur-type gear assemblies (26) to the top right spider assembly and mesh with the vernier dial spur-type gear (27) added to the adjacent shaft. Do this so that the stop pin on (27) is radial with the center of the spur-type gear assembly (26) and against one of the buttons on the gear-assembly when the spur-type gear (27) is turned clockwise. Back away the gear assembly (21) so that the drive pin is one tooth (maximum of two teeth) away from its position at the top of the slot in the base plate assembly (43), and mesh in this position with the two spur-type gear assemblies (26). Then install C washer retainer rings (30), one on each of the shafts.

Note.—Grind a pair of cutters to accommodate the C washer to act as pliers to crimp the washers, making sure that no rough edges result because of the crimping.

(11) Add the spur-type gear (28) to the top left spider. Also, add the main dial hub spur-type gear (29) to the shaft adjacent to the spider. With the vernier dial spur-type gear (27) so that its stop pin is up against the button stop as outlined in (10) above, the upper tap hole in the main dial hub spur-type gear (29) is located so that a straight edge bisects the upper tap hole when the straightedge is butted up against the shafts that carry the main dial hub spur-type gear (29) and the spur-type gear (28). Add the retainer rings (30), one each to the shafts that carry the gears (28) and (29).

(12) Add the idler wheel (23) to the bottom spider. Lubricate the shaft of the flywheel (22) and the shaft of the gear assembly (24), using the lubricating grease; then add the flywheel (22) and the gear assembly (24) that carries the cam (25), by mounting with the bearing plate (9); use the one No. 10–32 screw (11) for the bottom post (7) and the two No. 8–32 screws (12).

(13) Add the band change cam detent roller and the lever assembly (6) and the two helical springs (5). Bring the cam (25) forward to the bearing plate (9) and locate the cam in the roller, lining up the cam with the arm of the roller and lever assembly (6), and then tighten the setscrews in the cam (25).

(14) Check for smooth overall operation and tighten the two No. 6–32 screws (32) used to mount the gear assembly (31).

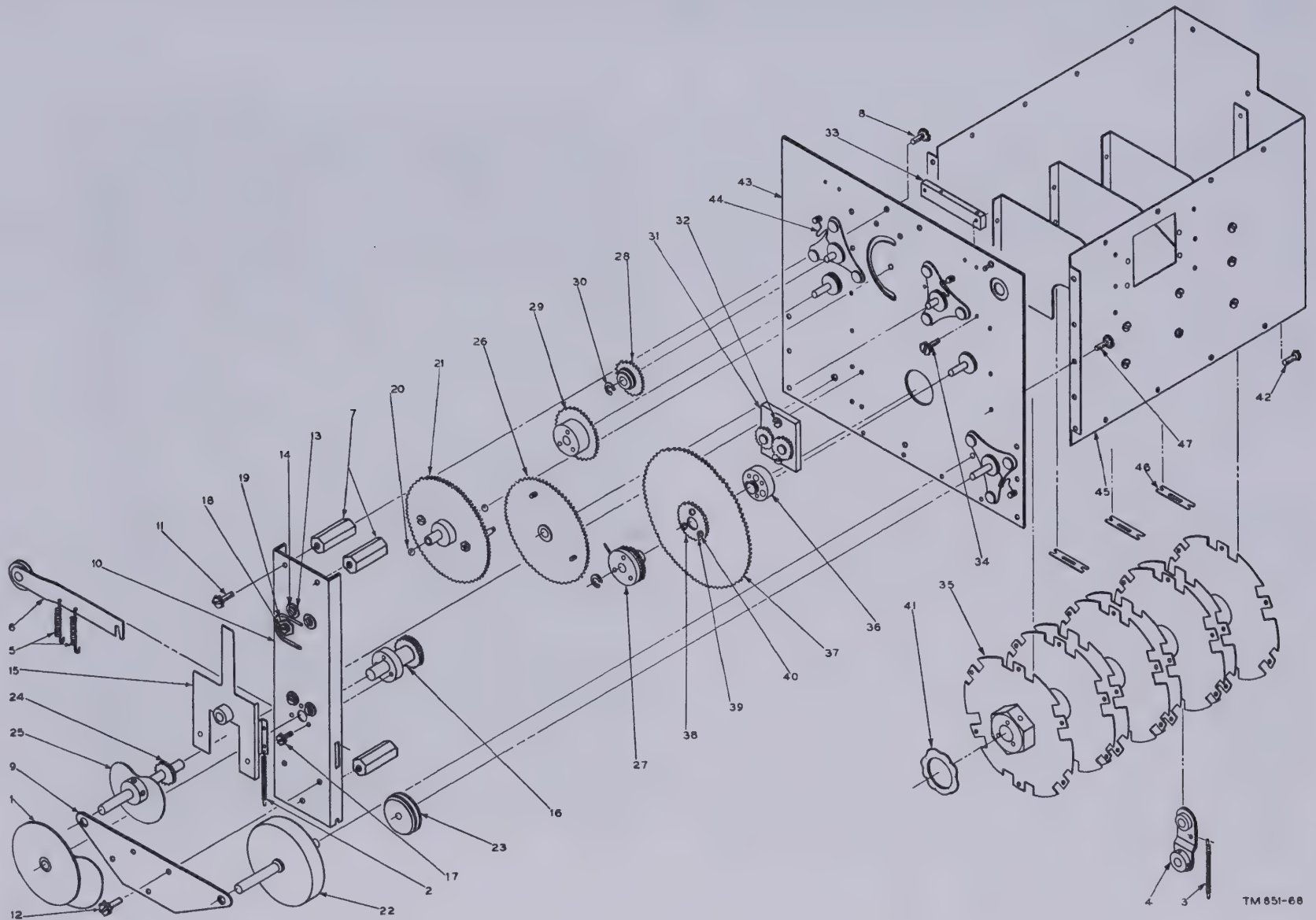

Figure 90. Radio receiver, all types, gear-train assembly, exploded view.

(15) Adjust bearing setscrew (18) mounted on bearing plate (10) for no slack, tightening with the No. 1/4–32 nut (19).

Caution: Make sure that the mounting tap of the bearing plate is not bent out during the adjustment of the bearing setscrew (18).

(16) Tighten the three No. 6–32 screws (17) that mount the hub of the gear assembly (16) to the bearing plate (10) so that the gear of the gear assembly (16) meshes properly with the small spur-type gear (38), mounted on the front bearing of the mounting disk and shaft assembly (35).

(17) Add the movable support main pointer bracket (15), the four retainer disks (13), mounted by the four No. 4–40 screws (14), providing for positioning the bracket (15). Also add the indicator slide helical spring (2).

(18) Add the cam, hub, and band change dial assembly (1), locating the dial so that the hairline on it lines up normal to the top edge of the base plate assembly (43).

e. Reassembly of Tuning Unit Assembly. To reassemble the tuning unit assembly the procedure used is the reverse of that outlined in *a* above.

Note.—When adding the main and vernier dials and dial indicator pointers to the chassis and tuning unit assembly, set the dials to the indicators so that both dials start from the zero dial indication.

92. Adjustment of Main Tuning Capacitor Drive Link and Spring

(fig. 91)

The tuning drive link of the main tuning capacitor may become displaced because of severe shock such as dropping the receiver. If so, it is evidenced by the main dial reading high in frequency on all bands by an amount equal to approximately 20 vernier dial divisions. To relocate the link, remove the tube shield from vfo tube V4 and the top cover from the tuning capacitor. This provides accessibility to the link and spring at the front end of the tuning capacitor. The spring probably will be in place but the link may have to be retrieved by removing the bottom cover from the tuning unit. Replace the spring, since it may be bent. Turn the TUNING control to bring the tuning capacitor

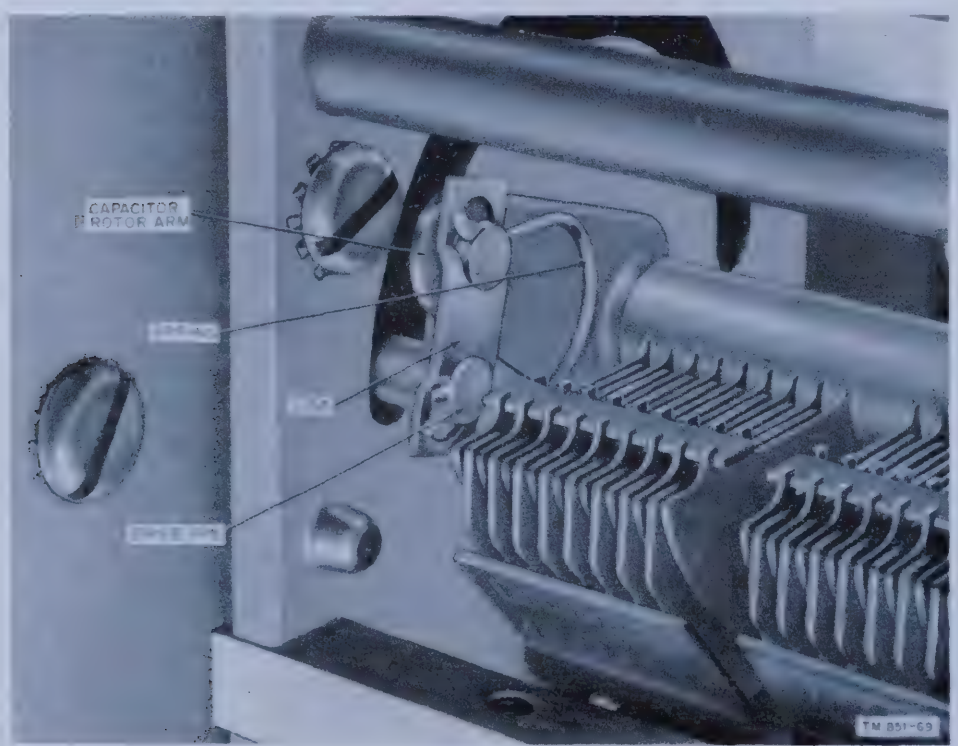

Figure 91. Radio receiver, all types, main tuning capacitor drive link and spring assembly.

rotor plates to full mesh. In this position, lightly adjust the capacitor rotor by hand, and place the link in position with the offset ends toward the front panel. Hold the spring with a pair of small-nosed pliers by its tip. The tip is to engage the groove in the drive pin. With the loop of the spring downward, place the other end of the spring over the groove in the pin on the capacitor rotor arm. Then stretch the spring just enough to engage the held end of the spring over the groove in the drive pin.

Section III. ALINEMENT PROCEDURES

93. Test Instruments Used for Alinement and Adjustment

The recommended method for alining the 455-kc and 3,955-kc i-f circuit of the receiver involves the use of an electronic sweep oscillator and a cathode-ray oscilloscope. The r-f and vfo circuits are alined adequately through the use of an a-m signal generator and an output meter. Alternately, these may be used to aline the receiver i-f circuit. The receiver AUDIO OUTPUT terminals are loaded, in either instance, with a matching loudspeaker or a 600-ohm resistor. A power output meter when used provides for the 600-ohm resistive load. When the loudspeaker is used, an a-c or a vtvm is connected across the AUDIO OUTPUT terminals or across the loudspeaker voice coil terminals. The cathode-ray oscilloscope when used has its vertical plate amplifier input terminals connected across the receiver detector load resistance, from the junction of R64 and R65 (fig. 59) at terminal board E15 to chassis.

a. Signal Generator.

(1) The a-m signal generator (par. 78) should be capable of providing at least a 30-percent modulated r-f signal. In addition to 455 kc and 3,955 kc (the intermediate frequencies of the receiver), the frequency range required is from .56 to 50 mc, slightly less than the frequency range of the receiver. The alinement frequencies are shown in figure 92. If necessary, the second harmonic generally can be used when the signal generator does not provide the fundamental frequency. For example, a signal generator covering all frequencies from 80 kc to 30 mc could be used to aline the receiver at 50 mc (fig. 92), by use of the second harmonic of 25 mc. For best results, the signal generator should have its output impedance in series with 100 ohms when the r-f and vfo circuits are being alined. For i-f alinement, this value is not critical. The frequency calibration of the signal generator is extremely important in order that the receiver dial calibration be correct. If this is doubtful, a frequency meter may be used to verify the accuracy of the signal generator.

(2) The electronic sweep oscillator should be capable of producing an fm (frequency modulation) of ± 20 kc maximum at each of the nominal 455-kc and 3,955-kc i-f test frequencies, as well as a synchronization voltage for locking the timing axis of the cathode-ray oscilloscope used for visual alinement. Both of these requirements are met in available electronic sweep oscillators, as provided by Signal Generator TS–465/U whose r-f signal range extends from 100 kc to 110 mc, for a 0- to 30-kc f-m sweep. The nominal 455-kc r-f signal frequency calibration of the electronic sweep oscillator is extremely important in order that the receiver 455-kc i-f amplifier circuit be alined to its proper midband position. This can best be determined by comparing the signal source with a frequency meter.

Note.—When the electronic sweep oscillator modulation is switched *off*, the synchronization voltage is also *off*, so that it does not provide the cathode-ray oscilloscope with a horizontal timing axis.

b. Output Meter.

(1) The output meter (par. 78) should respond to the modulation frequency of 400 cps used. It should have a load switch for selecting a 600-ohm resistive load and a meter scale multiplier switch to provide for approximately one-third scale deflection for 667 mw.

(2) The vtvm (par. 103) is used preferably in conjunction with the loudspeaker because of its high input impedance. When an available a-c voltmeter is used, it

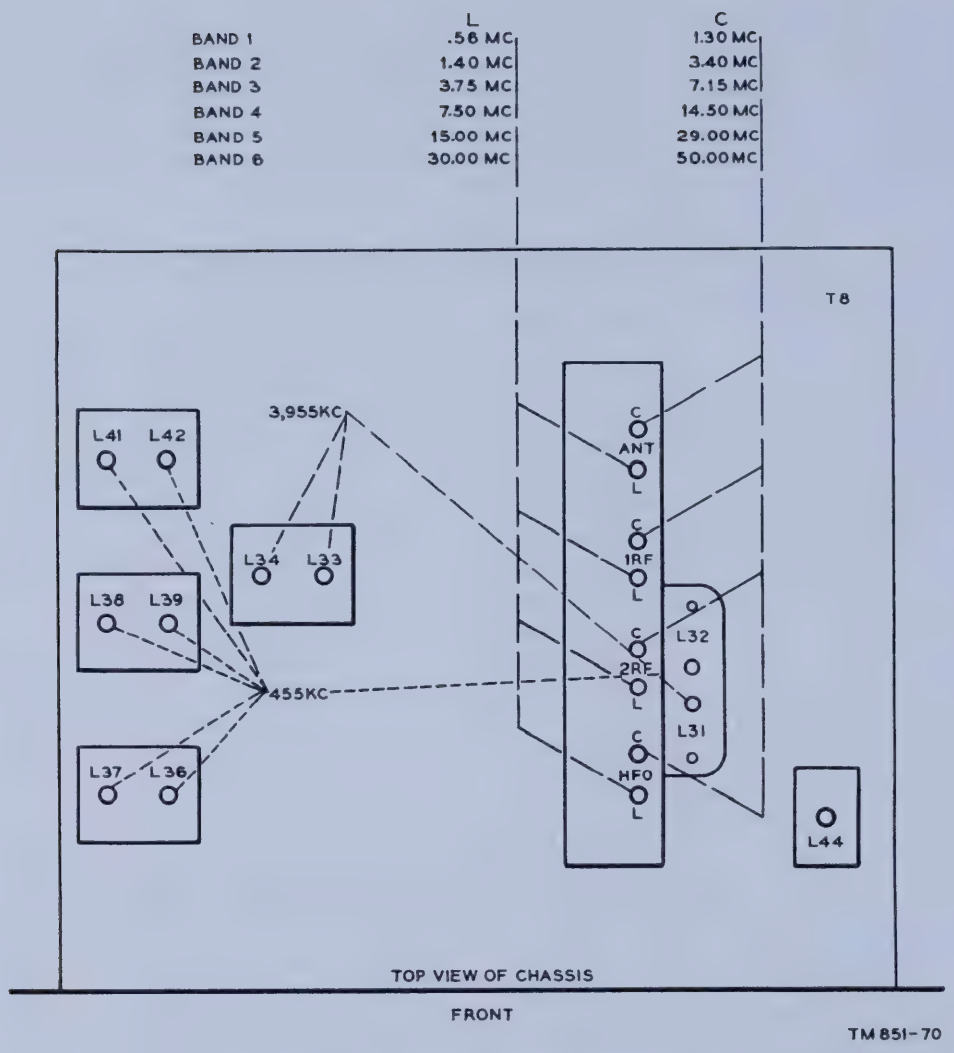

Figure 92. Radio receiver, all types, alinement chart.

should respond to the modulation frequency of the signal generator, preferably 400 cps. If it is connected across the AUDIO OUTPUT terminals, it should provide at least half-scale deflection for 20° volts a-c and its resistance should be at least 1,000 ohms per volt. If it is connected across the loudspeaker voice coil, it need provide only about half-scale deflection for 2 volts and its resistance need be only around 500 ohms.

c. Cathode-Ray Oscilloscope. The cathode-ray oscilloscope (par. 78) used in conjunction with the electronic sweep oscillator should have a fluorescent viewing screen of at least 1 inch in diameter.

d. Frequency Meter. This equipment is required for testing the accuracy of the signal generator at its various settings during the r-f alinement. Frequency Meter Set SCR–211–(*) (TM 11–300) and Frequency Meter TS–174B/U (TM 11–5044) are suitable.

Note.—The frequency meter may be used to determine the nominal 455-kc intermediate frequency of the electronic sweep oscillator, but the selective response of the 455-kc i-f crystal (Y8) to 455 kc provides for the accurate setting to 455 kc equally well.

e. Headset or Loudspeaker. These items may be used during alinement. A loudspeaker of the permanent-magnet type can be used.

f. Alinement Tool. A suitable alinement tool such as a ¼-inch diameter bakelite rod fitted with a .025-inch-thick brass bit, less than one-fourth of an inch wide and protruding one-eighth inch from one end of the rod, is required for alinement of the receiver.

g. Antenna Cable. A prefabricated antenna cable may be used to provide access to antenna

input connector J1. The antenna cable comprises antenna input Radio Frequency Plug UG–102/U, a length (about 30 inches) of twin-conductor insulated Radio Frequency Cable RG–22/U (Wire W–151) and a 100-ohm carbon resistor. The plug is connected to one end of the cable and the resistor is connected in series with one conductor at the other end of the cable. The other conductor is wired to the shielding braid and their junction is brought to the signal generator ground terminal. The resistor is brought out to the signal generator output terminal. If this facility is not available, the signal generator terminals may be brought to J1 by soldering a 100-ohm carbon resistor to a 2-inch length of bus wire. The resistor side is connected to the signal generator antenna terminal; the bus wire is brought to one terminal of J1. A 3- to 4-inch length of bus wire interconnects the signal generator ground terminal to the thumbscrew on the r-f tuner (adjacent to J1) and the remaining terminal on J1.

h. Miniature Tube Adapter. A miniature tube adapter (par. 78) is used to provide access to the pin 7 grid of first mixer V5. The adapter has connected to its corresponding pin terminal a .01-μf capacitor through which an input signal can be fed to the grid.

i. External Ground. A suitable external ground (par. 16) is required to ground the receiver during alinement. Make sure that the sheath of each shielded lead cable, from each test instrument used, is properly connected to the ground terminal of the instrument, to the receiver chassis, and to the external ground. Also, make sure that the ground terminal of the oscilloscope is interconnected with that of the electronic sweep oscillator, and that the sheath of the cable from the horizontal synchronization voltage terminal of the former to the corresponding input terminal of the latter is grounded to each instrument and to the external ground.

94. Calibration of Signal Generator

Accurate alinement of the vfo in the receiver requires the use of the frequency meter to check the signal generator setting. Do this by placing the signal generator and the frequency meter near each other. Turn on both equipments and allow them to warm up for at least 1 hour. Attach a piece of wire to the signal generator output connection and place the wire near the frequency meter antenna. Calibrate the frequency meter according to instructions furnished with the meter. Set the frequency meter to the exact frequency at which the signal generator is to be used. While listening to the headset, connected to the frequency meter, tune the signal generator to the approximate frequency until a zero beat is heard. The signal generator now is set for the exact frequency desired. Turn off the frequency meter and remove the wire attached to the signal generator output connection.

95. 455-Kc I-F Alinement Procedure

The 455-kc i-f circuit of the receiver is alined first. To provide for either output meter or oscilloscope alinement indications (par. 93), switch the receiver *on* and let it warm up for at least 1 hour. Then follow the applicable step sequence in the following chart.

Note.—Make sure that the TUNING control set to 2.5 mc does not tune in a powerful local signal. If it does detune it from its 2.5-mc position.

Step	Test equipment connections, adjustments, and indications	Receiver adjustments		
		Control	Setting	Alinement means
1	*Power output meter indication:* Connect equipment (par. 93). Using output meter (par. 93*b*(1)), adapter (par. 93*h*), and signal generator (par. 94*a*(1)), apply 455-kc signal, modulated 30 percent with 400 cps to receiver at a level to provide some indication on highest multiplier scale of meter.	SEND-REC (S9) MOD-CW (S7) AVC-MAN (S8) SELECTIVITY (S5) BAND CHANGE (S1) TUNING (C1) XTAL PHASING (C111) RF GAIN (R93)	REC MOD. MAN. 3 KC. 1.35–3.45 mc. 2.5 mc. On arrow. At maximum, but reduce to maintain the receiver output at 667 mw or 20 volts across 600-ohm load, as receiver is alined. This prevents receiver overload.	Adjust in turn L42, L41, L39, L38, L36, and L32 (fig. 92) for maximum output.

Step	Test equipment connections, adjustments, and indications	Receiver adjustments		
		Control	Setting	Alinement means
1—Con.	Reduce signal level as alinement is made, but keep it high enough to override receiver noise output. Radio Receivers R-483A/FRR and R-274C/FRR begin to overload for a signal input level of 270 uv, all others for a signal level of 195 uv.	IF GAIN (R211) (in Radio Receiver R-320A/FRC only). AUDIO GAIN (R84)---	At maximum. At maximum.	
2	Adjust signal frequency to exactly 455 kc as established at maximum receiver output by 455-kc crystal (Y8) of i-f filter circuit of receiver. Maintain signal generator setting at 455 kc as established, unless to recheck for frequency drift, if any.	SELECTIVITY (S5)---- Others same as step 1----	.2 KC---------- Other same as step 1.	None.
3	Same as step 2----------	SELECTIVITY (S5)---- Others same as step 1----	3 KC---------- Others same as step 1.	Readjust in turn L42, L41, L39, L38, L36, and L32 (fig. 92) for maximum output.
4	Same as step 2----------	SELECTIVITY (S5)---- Others as for step 1------	1.3 KC---------- Others same as step 1.	Adjust L37 (fig. 92) for maximum output.
ALTERNATIVE THROUGH FOR STEPS 1 4	*Oscilloscope indication:* Connect equipment as outlined (par. 93). Using cathode-ray oscilloscope (par. 93*c*), adapter (par. 93*h*), and electronic sweep oscillator (par. 93*a*(2)), apply a 455-kc signal, f-m, ±20 kc at a level to provide some visual indication on oscilloscope screen. *Note.*—Render the visual indication (two response curves), a stationary locked image, at a usable level, in focus, and at proper intensity. Reduce ±20-kc sweep so that small notches appear on each response curve. Repeat alinement for maximum amplitude and image superposition to predominant response of each curve.	Same as steps 1 through 4.	Same as step 1 through 4. When complete image superposition cannot be obtained, back up on RF GAIN control since this indicates condition of receiver overload. When repeating alinement at reduced sweep, slight adjustment of XTAL PHASING (C111) control will provide for exact superposition, which, when attained, completes alinement.	Same as steps 1 through 4, but for both maximum amplitude and image superposition. In step 2, nominal 455-kc signal frequency is established by Y8, 455-kc crystal.

96. Bfo Alinement Procedure

The bfo is alined after the alinement of the 455-kc i-f circuit (par. 95). Perform the alinement for power output meter or oscilloscope indication in accordance with the applicable procedure outlined in the following chart:

Step	Test equipment connections, adjustments, and indications	Receiver adjustments		
		Control	Setting	Alinement means
1	*Power output meter indication:* Connect equipment as outlined (par. 93). Using output meter (par. 93*b*(1)), adapter (par. 93*h*), and signal generator (par. 93*a*(1)), apply 455-kc signal to receiver to provide some indication on highest multiplier scale of meter. Reduce signal level as when alinement is made so that receiver output of 667 mw or 20 volts across 600-ohm load is maintained.	MOD-CW (S7) BEAT OSC. (L45) SELECTIVITY (S5) Others same as step 1 (par. 95).	CW At dial indication. 1.3 KC. Others same as step 1 (par. 95).	Allow receiver bfo V13 a 1-hour warm-up period. Adjust L44 (fig. 92) for zero power output meter indication. *Note.*—Recheck of 455-kc signal frequency is indicated in step 2 (par. 95).
ALTERNATIVE FOR STEP 1	*Oscilloscope indication:* Connect equipment (par. 93). Using cathode-ray oscilloscope (par. 93*c*), adapter (par. 93*h*), and electronic sweep oscillator (par. 93*a*(2)), apply 455-kc signal at a level to provide vertical line trace on oscilloscope screen.	Same as step 1	Same as step 1	Allow receiver bfo V13 a 1-hour warm-up period. Adjust L44 (fig. 92) for line trace to reduce to zero, which occurs at zero audio output.

97. 3,955-Kc I-F Alinement Procedure

The 3,955-kc i-f circuit of the receiver is alined after the alinement of the bfo (par. 96). Perform the alinement for power output or oscilloscope indication in accordance with the applicable step sequence in the following chart:

Step	Test equipment connections, adjustments, and indications	Receiver adjustments		
		Control	Setting	Alinement means
1	*Power output meter indication:* Connect equipment (par. 93). Using output meter (par. 93*b*(1)), adapter (par. 93*h*), and signal generator (par. 93*a*(1)), apply 3,955-kc signal, modulated 30 percent with 400 cps to receiver at a level to provide some indication on highest multiplier scale of meter. Adjust signal frequency slightly so that power output meter indication is a maximum. This provides for signal to be exactly 3,955 kc. Reduce signal level when alinement is made, but keep it high enough to override receiver noise output. Radio Receivers R–483A/FRR and R–274C/FRR begin to overload for a signal input level of 210 uv, all others for a signal level of 120 uv.	BAND CHANGE (S1) Others same as step 1 (par. 95).	7.4–14.8 mc Other same as step 1 (par. 95).	Adjust in turn L31, L33, and L34 (fig. 92) for maximum output.

Step	Test equipment connections, adjustments, and indications	Receiver adjustments		
		Control	Setting	Alinement means
ALTERNATIVE FOR STEP 1	*Oscilloscope indication:* Connect equipment (par. 93). Using cathode-ray oscilloscope (par. 93*c*), adapter (par. 93*h*), and electronic sweep oscillator (par. 94*a*(2)), apply a 3,955-kc signal, f-m ±20 kc at a level to provide some visual indication on oscilloscope screen.	Same as step 1	Same as step 1	Same as step 1, but for both maximum amplitude and image superposition.
	Adjust signal frequency slightly for response trace superposition to extent possible.			
	Note.—When alinement is complete remove adapter from socket of V5.			

98. R-F and Vfo Alinement Procedure

The six frequency bands of the receiver are alined in sequence, starting with band 1 (.54 to 1.35 mc), after the alinement of the 3,955-kc i-f circuit (par. 97). To perform the alinement for power output meter indication, follow the step sequence in the following chart:

Step	Test equipment connections, adjustments, and indications	Receiver adjustments		
		Control	Setting	Alinement means
1	*Band 1 (.54–1.35 mc) power output meter indication:* Connect equipment (par. 93).	XTALS (S2, S3) (in Radio Receivers R–274A/FRR and R–274C FRR only).	VFO	Adjust in turn (fig. 92) HFO, ANT, IRF, and 2RF, L adjustment for maximum output.
	Using output meter (par. 93*b*(1)), antenna cable (par. 93*g*), and signal generator (par. 93*a*(1)), apply .56–mc signal (par. 94), modulated 30 percent with 400 cps to receiver at a level to provide some indication on highest multiplier scale of meter. Reduce signal level when alinement is made to maintain output meter reference level of 667 mw chosen.	IF GAIN (R211) (in Radio Receiver R–320A/FRC only).	At maximum.	
		SEND-REC (S9)	REC.	
		MOD-CW (S7)	MOD.	
		AVC-MAN (S8)	AVC.	
		SELECTIVITY (S5)	3 KC.	
		LIMITER-OFF (S6)	OFF.	
		RF GAIN (R93)	At maximum.	
		BAND CHANGE (S1)	.54–1.35 mc.	
		TUNING (C1)	.56-mc dial indication.	
		AUDIO GAIN (R84)	At maximum, but as alinement is made, reduce to maintain 667 mw or 20 volts across 600-ohm load. This prevents receiver overload.	
2	Same as step 1, but for a 1.3-mc signal (par. 94).	TUNING (C1) Others same as step 1	1.3-mc dial indication Others same as step 1	Adjust in turn (fig. 92) HFO, ANT, IRF, and 2RF, C adjustments for maximum output.
3	Repeat steps 1 and 2 in sequence.	Repeat steps 1 and 2 in sequence.	Repeat steps 1 and 2 in sequence.	Repeat steps 1 and 2 in sequence until no further increase in output can be realized.

Step	Test equipment connections, adjustments, and indications	Receiver adjustments		
		Control	Setting	Alinement means
4	Repeat steps 1 and 2 in sequence for signal generator signal level of 3 uv.	AVC-MAN (S8) RF GAIN (R93) Others as for steps 1 and 2 in sequence.	MAN Set as needed to maintain 667-mw output, when receiver is alined. Others as for steps 1 and 2 in sequence.	Repeat steps 1 and 2 in sequence until no further increase in output can be realized.
5	*Band 2 (1.35–3.45 mc):* Same as steps 1 through 4 for band 1, but use signal at 1.4 mc (par. 94) for step 1 and at 3.4 mc (par. 94) for step 2.	BAND CHANGE (S1) TUNING (C1A-H) Others same as steps 1 through 4 for band 1.	1.35–3.45 mc For step 1, 1.4 mc; for step 2, 3.4 mc. Others same as steps 1 through 4 for band 1.	Same as steps 1 through 4 for band 1.
6	*Band 3 (3.45–7.4 mc):* Same as steps 1 through 4 for band 1, but use signal at 3.75 mc (par. 94) for step 1 and at 7.15 mc (par. 94) for step 2.	BAND CHANGE (S1) TUNING (C1) Others same as steps 1 through 4 for band 1.	3.45–7.4 mc For step 1, 3.75 mc; for step 2, 7.15 mc. Others same as steps 1 through 4 for band 1.	Same as steps 1 through 4 for band 1.
7	*Band 4 (7.4–14.8 mc):* Same as steps 1 through 4 for band 1, but use signal at 7.5 mc (par. 94) for step 1 and at 14.5 mc (par. 94) for step 2.	BAND CHANGE (S1) TUNING (C1) Others same as steps 1 through 4 for band 1.	7.4–14.8 mc For step 1, 7.5 mc; for step 2, 14.5 mc. Others same as steps 1 through 4 for band 1.	Same as steps 1 through 4 for band 1.
8	*Band 5 (14.8–29.7 mc):* Same as steps 1 through 4 for band 1, but use signal at 15.0 mc (par. 94) for step 1 and at 29.0 mc (par. 94) for step 2.	BAND CHANGE (S1) TUNING (C1) Others same as steps 1 through 4 for band 1.	14.8–29.7 mc For step 1, 14.0 mc; for step 2, 29.0 mc. Others same as steps 1 through 4 for band 1.	Same as steps 1 through 4 for band 1.
9	*Band 6 (29.7 to 54 mc):* Same as steps 1 through 4 for band 1, but use signal at 30.0 mc (par. 94) for step 1 and at 50.0 mc (par. 94) for step 2.	BAND CHANGE (S1) TUNING (C1) Others same as steps 1 through 4 for band 1.	29.7–54 mc For step 1, 30.0 mc; for step 2, 50.0 mc. Others same as steps 1 through 4 for band 1.	Same as steps 1 through 4 for band 1.

99. Alinement Procedure After Tube Replacement

The radio receiver does not require realinement after any tube replacement. However, this applies to vfo tube V4 only if the main dial calibration (par. 150) is within the calibration tolerance of ¼ of 1 percent of frequency. When V4 is replaced, check the main dial calibration, especially at the h-f end of each band. If realinement is necessary, realine the C adjustment for the HFO (fig. 92) for each frequency band (par. 98) whose main dial calibration is outside the calibration tolerance.

Note.—Perform the realinement carefully since only a very slight adjustment is needed.

100. Alinement Procedure After R-F Tuner Subassembly Replacement

When one or more of the r-f tuner subassemblies for any one band of the receiver is replaced, the receiver r-f and vfo alinement procedure (par. 98) may be restricted to the realinement of the L and C adjustments (fig. 92) applicable to each r-f tuner subassembly involved. On band 1, the L and C ANT, 1RF, 2RF, and HFO (fig. 92) adjustments are made, respectively, with r-f tuner subassemblies L1, L8, L15, and L25; on band 2, respectively with L2, L9, L16, and L26; on band 3, respectively with L3, L10, L17, and L27; on band 4, respectively with L4, L11, L18, and L28; on band 5, respectively with L5, L12, L19,

and L29; and on band 6, respectively with L6, L13, L20, and L30.

101. Alinement Procedure After I-F Transformer or Bfo Subassembly Replacement

When one or more of the T1, T2, T3, T4, or T5 i-f transformer or T6 bfo subassemblies are replaced, the receiver 455-kc, bfo, or 3,955-kc i-f alinement procedure (pars. 95–97) may be restricted to the realinement of L32 and L31 for T1; L33 and L34 for T2; L36 and L37 for T3; L39 and L38 for T4; L42 and L41 for T5; and L44 for T6.

Section IV. FINAL TESTING

102. General

This section is intended as a guide to determine the quality of a repaired radio receiver. The minimum test requirements (pars. 103–120) may be performed by maintenance personnel with adequate test equipment and the necessary skills. Repaired equipment meeting these requirements will furnish uniformly satisfactory operation.

103. Test Equipment Required for Final Testing

The instruments needed for testing the repaired equipment are listed below:

Signal generators with metered output to cover the r-f range of the radio receiver (par. 78).

Audio oscillator with an a-f output at audio frequencies ranging at least from 50 to 10,000 cps (par. 78).

Output meter whose input impedance is at least 10,000 ohms (par. 78).

Antenna cable (par. 93*g*).

Cathode follower i-f output cable comprising an i-f output Plug PL–259A, a length (about 20 inches) of coaxial Radio Frequency Cable RG–11/U, and a 68-ohm fixed composition resistor (3Z6006H8–11). The connector is connected to one end of the cable whose other end has the resistor connected between the cable braided shield and the coaxial conductor.

Vacuum-tube voltmeter (par. 78).

Doublet antenna (par. 23) or single-insulated wire antenna.

Headset, 2 pair (par. 14).

Spectrum Analyzer TS–723/U (stock No. 3F1722–5.4).

104. Sensitivity

a. Connect the output meter (par. 93). Set it to provide a 600-ohm matching load and to indicate on its highest multiplier scale.

b. Connect the signal generator to antenna input connector J1, using the prefabricated antenna cable (par. 93*g*).

c. Set the receiver controls for mcw reception (pars. 29 and 30) but with the AVC-MAN switch set at MAN, RF GAIN control at maximum, and SELECTIVITY control at NON-CRYSTAL 3KC setting.

d. Set the signal generator to provide a 3-uv r-f voltage within the frequency range (.54 to 54.0 mc) of the receiver, with the signal modulated 30 percent with 400 cps.

e. Make tests at low-, middle-, and high-frequency points of each band in the following manner:

(1) Adjust the receiver AUDIO GAIN control for a reference level receiver output of 10 mw (2.47 volts ac across the 600-ohm load). Use the output meter multiplier scale which provides approximately half-scale deflection.

(2) Turn off the signal generator modulation and measure the receiver output; adjust the AUDIO GAIN control for a reading of 1 mw; then turn the modulation on again and adjust the signal generator signal level to provide for 10-mw output with modulation; 1-mw modulation off (10:1 signal-plus-noise to noise ratio).

(3) Readjust the AUDIO GAIN control to provide the 10-mw reference output at the 10:1 ratio.

f. The minimum requirements are that the r-f voltage input is 2 uv, or less, at any signal frequency within the .54- to 54.0-mc frequency range of the receiver.

105. Selectivity

(fig. 93)

a. Replace the 68-ohm resistor with a 5,000- to 10,000-ohm resistor at the i-f output cable.

b. Connect an a-c vtvm across the 5,000- or 10,000-ohm resistor.

c. Repeat the sensitivity test outlined in paragraph 104 at 3 mc. Set the SELECTIVITY switch to its 3 KC position and note and record

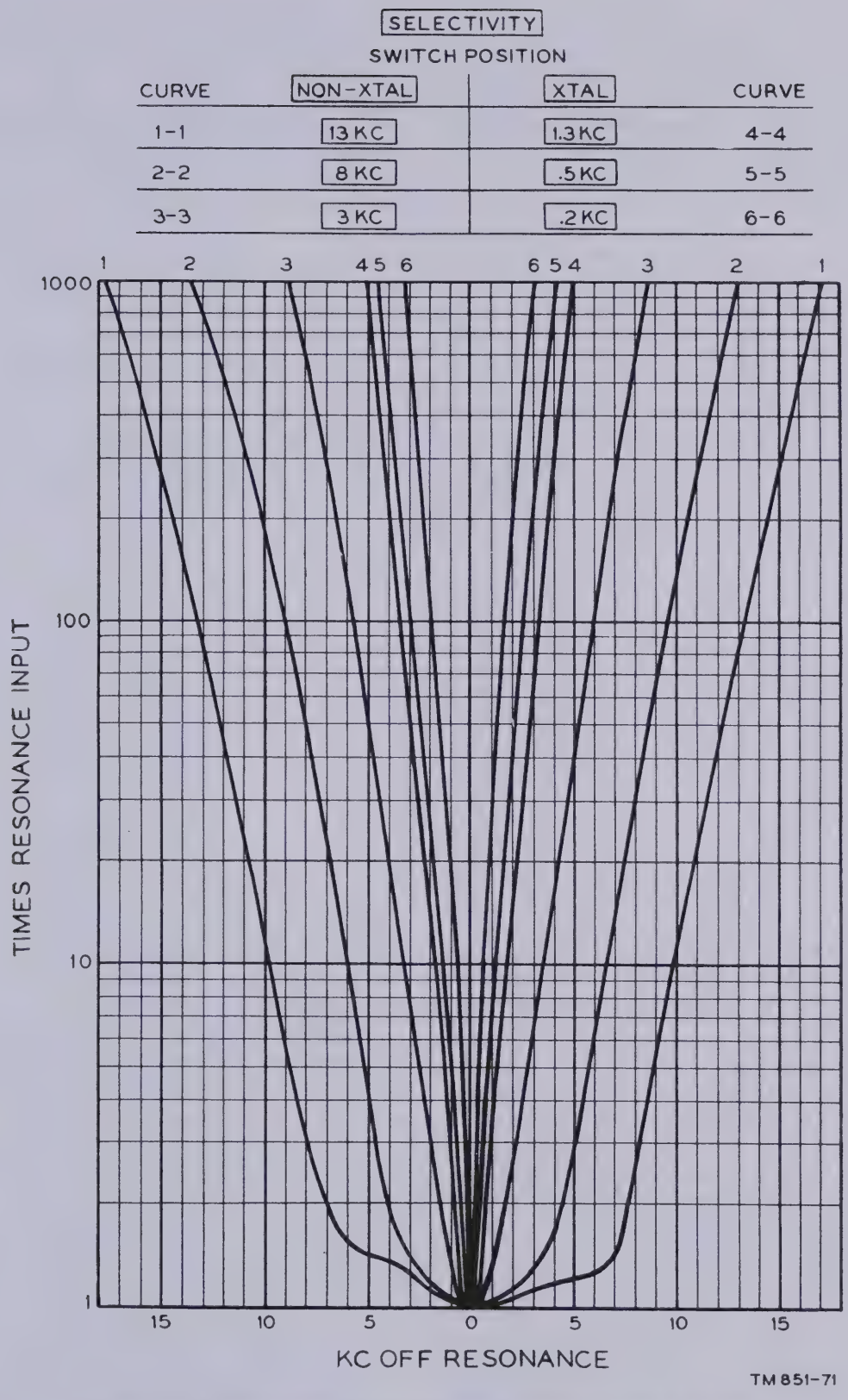

Figure 93. Radio receiver, all types, overall selectivity curves at 3 mc.

the receiver microvolt input for normal performance.

d. Turn the modulation off, adjust generator output to 10 uv. Adjust RF GAIN control to prevent overloading and to establish a reading of .5 or 1 volt on the vtvm as reference.

e. Successively increase the generator output by 10, 100, and 1,000 times, detuning the generator on either side of resonance at each step so that the .5- or 1-volt reference level output is maintained. Note and record at each step the generator deviation in kilocycles from resonance.

Note.—Bandwidths may be read or interpolated from signal generator dial and vernier scales. The preferred method, however, is to introduce a crystal-controlled signal from the frequency meter after each signal generator setting and to read the audio beat frequency on an audio-frequency counter or by comparing the tone against an identical audio signal generator tone by means of the oscilloscope. The audio signal generator scale reading represents the bandwidth above or below test frequency.

f. Repeat the procedure for the 13, 8, 1.3, .5, and .2 KC positions of the SELECTIVITY switch.

g. Plot as abscissae on semilogarithmic graph paper the plus and minus kilocycle deviations from resonance against their respective 10, 100, or 1,000 times, logarithmic ordinate resonance input.

h. The minimum requirements are that the gain at the edges of the bandwidth provided by each position of the SELECTIVITY switch is 6 db down from that at the midband value.

Example: Consider the 13 KC position of the SELECTIVITY switch for which the acceptance bandwidth of the receiver is 6.5 kc on either side of resonance. Thus, at 6.5 kc on either side of resonance, the gain of the receiver is to be −6 db—that is, only half of what it is at resonance. This means that the graph plot of the receiver for the SELECTIVITY switch in the 13 KC position must be such that at ±6.5 kc off resonance the receiver input for reference output must approximate twice that at resonance.

106. Rated Power Output

a. Repeat the sensitivity test (par. 104) at any modulated r-f signal within the receiver frequency range.

b. Then advance the receiver AUDIO GAIN control to meet the minimum requirements (*c* below).

c. The minimum requirement is that for 2 uv of signal input the receiver power output is at least 2 watts.

107. Rated Cathode Follower Output

a. Connect the prefabricated cathode follower cable and the vtvm (par. 103) to the IF OUTPUT connector J2 on the rear apron of the receiver chassis.

b. Repeat the sensitivity test (par. 104) at any modulated r-f signal within the receiver frequency range.

c. The minimum requirement is that for 2 uv of signal input the receiver cathode follower i-f output is a minimum of 200 millivolts.

108. Image Rejection Ratio

a. Repeat the sensitivity test (par. 104) at each of the signal frequencies shown below:

Band	Signal frequency (mc)	Image rejection ratio	
		Voltage ratio	Db
1	1. 35	60,000 to 1	95
2	3. 4	10,000 to 1	80
3	7. 4	4,000 to 1	72
4	14. 5	300,000 to 1	109
5	29. 5	50,000 to 1	94
6	50. 0	5,000 to 1	74

b. In turn, set the signal generator 910 kc higher in frequency than the frequencies shown for bands 1, 2, and 3, and 7,910 kc higher in frequency than the frequencies shown for bands 4, 5, and 6. For each *image* setting, note the signal generator signal input to the receiver for the 10-mw reference level output.

c. Compute the ratio of the signal generator input at each image frequency to that for the corresponding sensitivity test made and express in db.

d. The minimum requirements of the image rejection ratio calculated (*c* above) are shown in the chart (*a* above).

109. 455-Kc I-F Rejection Ratio

a. Repeat the sensitivity test (par. 104) at a signal frequency of 600 kc.

b. Keeping the receiver tuned to 600 kc, set the signal generator to 455 kc.

c. Increase the 455-kc signal level input to the receiver to get the 10-mw reference level output.

d. Compute the ratio of the receiver input at 455 kc to that for the sensitivity test at 600 kc and express in db to get the 455-kc i-f rejection ratio.

e. The minimum requirements are that the 455-kc i-f rejection ratio is at least 69 db at 600 kc, increasing with the signal frequency tuned in on bands 1, 2, or 3 of the receiver.

110. 3,955-Kc I-F Rejection Ratio

a. Repeat the sensitivity test (par. 104) at a signal frequency of 7.6 mc.

b. Keeping the receiver tuned to 7.6 mc, set the signal generator to 3,955 kc.

c. Increase the 3,955-kc signal level input to the receiver to get the 10-mw reference level output.

d. Compute the ratio of the receiver input at 3,955 kc to that for the sensitivity test at 7.6 mc and express in db to get the 3,955-kc i-f rejection ratio.

e. The minimum requirements are that the 3,955-kc i-f rejection ratio is at least 94 db for any signal frequency tuned in on bands 4, 5, or 6 of the receiver.

111. Receiver C-W Performance

a. Set the receiver controls for c-w reception (pars. 29 and 31).

b. Connect the output meter (par. 93). Set it to provide a 600-ohm matching load and to indicate on its highest multiplier scale.

c. Apply an unmodulated r-f voltage to antenna input connector J1, using the antenna cable (par. 93*g*).

d. Vary the BEAT OSC. control and note that it varies the receiver tone output in the headset plugged in the PHONES jack in the front panel.

e. Determine the pitch of the tone output on either side of zero beat by zero-beating the headset output from an audiofrequency generator with the headset output from the receiver. Do this by holding one headset to one ear and wearing a headset, using the free hand to adjust the frequency of the audio oscillator (par. 103). If desired, the audio output from the receiver may be compared with the audio signal generator on the oscilloscope.

f. Check the beat-frequency oscillator stability by noting that the receiver tone output is constant for each setting of the BEAT OSC. control.

g. Disconnect signal generator and connect the receiver to a suitable antenna (pars. 5 and 7), so that a high-speed telegraph signal may be tuned in. Switch the AVC-MAN switch to AVC and adjust the RF GAIN control, so that the receiver background noise does not impair reception.

h. The minimum requirements are that the BEAT OSC. control range is ± 3 kc, at a constant tone for the BEAT OSC. control position chosen Also that the c-w reception of high-speed telegraph is not impaired when using avc.

112. Sensitivity, C-w Signal

a. Repeat the procedure described in paragraph 111*a*, *b*, and *c*.

b. Set the BEAT OSC. control to provide a 1-kc tone output in the headset (par. 111*e*).

c. Perform a receiver sensitivity test (par. 104), but to measure the receiver noise output, turn the MOD-CW switch to MOD.

d. The minimum requirements are that the r-f voltage input is .75 uv, or less, at any signal frequency within the .54- to 54.0-mc frequency range of the receiver.

113. Heterodyne Interference Attenuation

a. Connect a suitable antenna and the signal generator to the receiver.

b. Set the receiver controls for mcw or c-w reception and tune in a received carrier signal.

c. Adjust the signal generator to a frequency closely adjacent to but above the frequency of carrier signal tuned in on the receiver.

d. With the SELECTIVITY switch set at one of its XTAL positions, adjust the receiver XTAL PHASING control to attenuate the heterodyne interference caused by the signal generator signal.

e. The minimum requirement is that the XTAL PHASING control highly attenuates the heterodyne interference when closely adjacent to the desired signal.

f. Repeat for an interference signal below the carrier frequency.

Note.—The XTAL PHASING control functions only when the SELECTIVITY switch is in one of its XTAL positions.

114. Avc Test

a. Repeat the sensitivity test (par. 104) at any modulated r-f signal within the receiver frequency range.

b. Set the AVC-MAN switch at AVC.

c. Increase the signal generator input to the receiver from 2 to 200,000 uv.

d. The minimum requirement is that the receiver output remains constant within 14 db, or not to be more than approximately 250 mw.

115. Calibration Accuracy

a. Set the receiver controls for c-w reception (pars. 28 and 30). Allow a 1-hour warmup period. Make sure the BEAT OSC. control is set for zero beat.

b. Connect an r-f signal generator (par. 78) to the receiver under test.

c. Inject a signal from the generator at the low-, middle-, and high-frequency points of each band. Adjust the BEAT OSC. control to zero setting.

d. The minimum requirement is that the main dial calibration accuracy is at least ¼ of 1 percent of frequency over the frequency range of the receiver.

Note.—By connecting a 2-foot length of insulated wire to antenna input connector J1, and dressing the free end of the wire around the tube shield of 3.5-mc oscillator V8 the 3.5-mc oscillator output can be used at intervals of of 3.5 mc above 10.5 mc as a secondary frequency standard.

e. At each test frequency, the beat note developed is the frequency error and it may be read by comparison with an audio signal generator. The percentage error may be obtained by dividing the frequency error by test frequency and multiplying the quotient by 100. The preferred method of testing is to tune the receiver to marked intervals on the tuning dial and to read the beat note representing the difference between dial frequency and generator frequency.

Note.—The 3.5-mc oscillator functions only for the double conversion position of S4—that is, for signal frequency reception above 7.4 mc; thus, 3 by 3.5 mc or 10.5 mc is its lowest harmonic frequency usable as a frequency standard.

116. Overall Fidelity

(fig. 94)

a. Repeat the sensitivity test (par. 104) at a 3-mc signal frequency, using the audio oscillator (par. 103) to provide external modulation of 30 percent with 400 cps.

b. Advance the AUDIO GAIN control to maximum, setting the RF GAIN control to maintain the 50-mw reference level output.

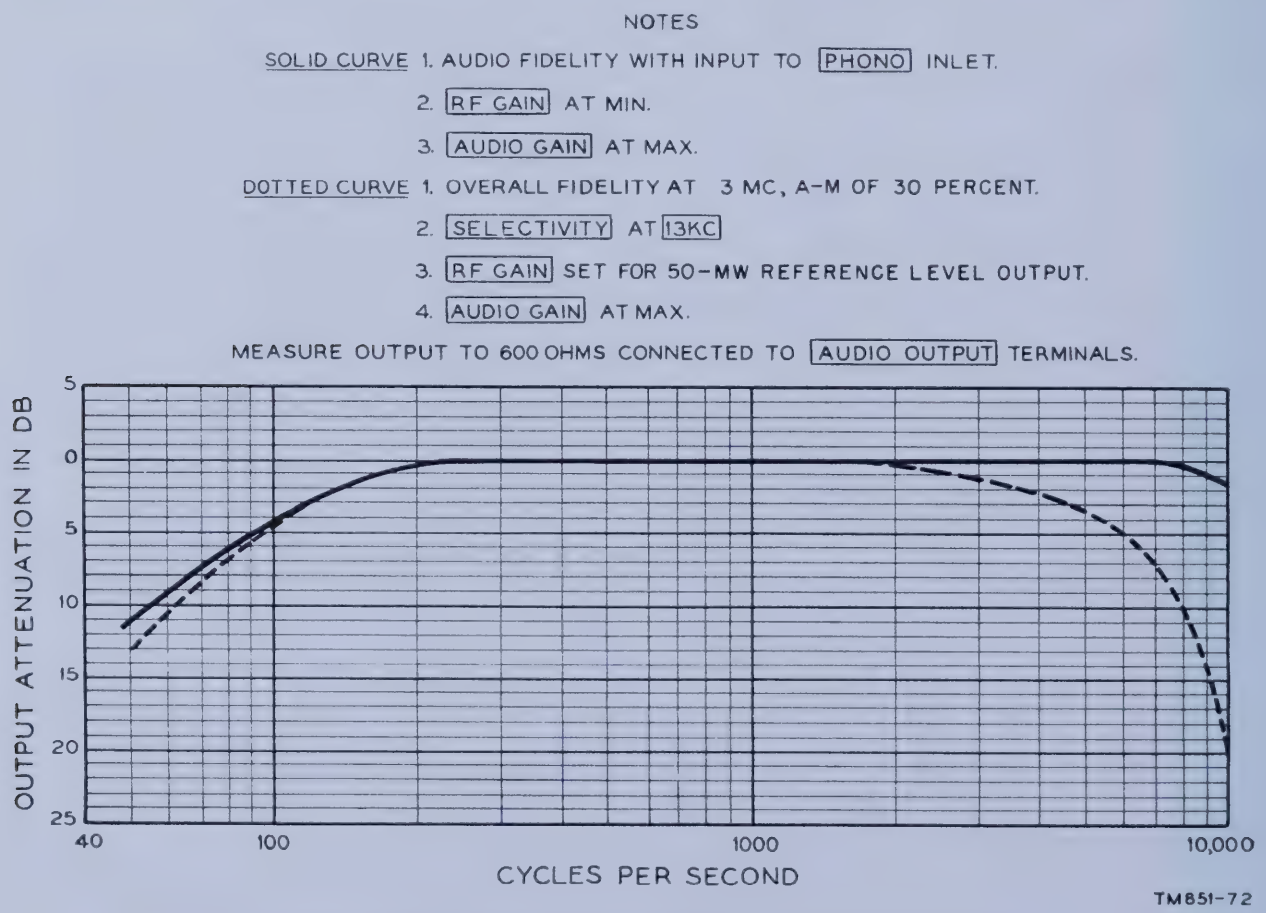

Figure 94. Radio receiver, all types, audio and overall fidelity curves.

c. Then set the SELECTIVITY switch to its 13 KC position.

d. Note and record the microvolt input to the receiver and maintain the 30-percent amplitude modulation as the db output level is recorded at representative frequencies (200-cps intervals) in the 50- to 10,000-cps audio frequency range.

e. The minimum requirement is that the overall fidelity of the receiver, referred to the output at 400 cps, will be within 3 db from 200 to 4,000 cps; also that the response approximates that shown in figure 94.

117. Audio Fidelity

(fig. 94)

a. Connect the audio oscillator (par. 103) to the PHONO terminals on the rear apron of the receiver chassis or to the junction of C143 and R84, as applicable, using a shielded single conductor cable whose sheath is connected to the G (ground) terminal of the audio oscillator and the G terminal of the PHONO inlet or chassis, as applicable. Provide an external ground for the sheath at the audio oscillator.

b. Connect an output meter to the AUDIO OUTPUT terminals, setting it to provide a 600-ohm matching load. Also connect the vtvm (par. 103) across the PHONO inlet or from the junction of C143 and R84, as applicable.

c. Set the receiver RF GAIN control to minimum and the AUDIO GAIN control to maximum.

d. Set the audio oscillator at 400 cps at an input level to provide for 50 mw of receiver output.

e. Note and record the vtvm level to the PHONO inlet or from the junction of C143 and R84, as applicable, and maintain this input voltage as output db levels are recorded at representative frequencies (200-cps intervals) in the 50- to 10,000-cps audio frequency range.

f. The minimum requirements are that the audio fidelity response approximates that shown in figure 94.

118. Overall Distortion at 2-watt Output

a. Repeat the rated power output test (par. 106) and leave the AUDIO GAIN control set for the 2-watt receiver output.

b. Connect the spectrum analyzer (par. 103) to the receiver AUDIO OUTPUT terminals and the vtvm (par. 103) to the output terminals of the spectrum analyzer.

c. Switch the spectrum analyzer for measurements at 400 cps and 5,000 cps, and determine the overall distortion.

d. The minimum requirement is that the total harmonic distortion at 2 watts is at least −10 db—that is, not greater than 10 percent of 2 watts.

119. Overall Distortion at 10-mw Output

a. Repeat the sensitivity test (par. 104) for any signal frequency within the receiver frequency range.

b. Connect the spectrum analyzer (par. 103) and the vtvm (par. 103) as described in paragraph 118*b*.

c. Increase the signal input to the receiver to 50 uv but maintain the 10-mw reference level output by turning the AUDIO GAIN control to the proper counterclockwise setting.

d. Follow the procedure described in paragraph 118*c* for representative modulation percentages of the signal at 400 cps and 5,000 cps, within the modulation percentage range of 10 to 90 percent.

e. The minimum requirement is that the total harmonic distortion at 10 mw is −17 db or less—that is, not greater than 2 percent of 10 mw.

CHAPTER 6

SHIPMENT AND LIMITED STORAGE AND DEMOLITION TO PREVENT ENEMY USE

Section I. SHIPMENT AND LIMITED STORAGE

120. Disassembly

The following instructions are recommended as a guide for preparing each receiver equipment for transportation and/or storage.

a. To disconnect the doublet antenna, reverse the installation procedure described in paragraph 23 to the extent that the components comprising it are separated and reeled for repacking.

Note.—The tactical situation may be such that the doublet antenna should be kept assembled for easy installation at the new site chosen.

b. Disconnect the antenna lead-in wire and reel it up.

c. Disconnect the a-c power cable from the power source and all cables from the radio receiver.

d. Mesh the main tuning capacitor fully.

e. With regard to the dismantling of other associated equipment not covered by this manual, follow instructions in the applicable technical manual in each specific instance.

f. In Radio Receivers R–274A/FRR and R–274 C/FRR, remove the crystals, if any, from the frequency control unit by loosening the knurled screw on top of the unit and pushing the retainer spring assembly to the rear so that each crystal can be removed from its crystal socket.

121. Repacking for Shipment or Limited Storage

a. The exact procedure in repacking for shipment or limited storage depends on the material available and the condition under which the equipment is to be shipped or stored. Reverse the procedure given in paragraph 22 and figure 12.

b. Whenever practicable, place the dehydrating agent (silica gel) in the wooden case and in each carton used for the headset and cords. Protect the cartons used for the receiver and running spares with a waterproof paper barrier. Seal the seams of the paper barrier with waterproof sealing compound or tape. Provide at least 3 inches of excelsior padding or similar material between the paper barrier and the packing case, in instances where the original packing complement is not available.

Section II. DEMOLITION OF MATERIEL TO PREVENT ENEMY USE

122. General

The demolition procedures outlined in paragraph 123 will be used to prevent the enemy from using or salvaging this equipment. Demolition of the equipment will be accomplished only upon order of the commander.

123. Methods of Destruction

a. Smash. Smash the crystals, tubes, controls, transformer assemblies, gear-train assembly, and headsets; use sledges, axes, handaxes, pickaxes, hammers, crowbars, or heavy tools.

b. Cut. Cut internal and external wires and cables; use axes, handaxes, or machetes.

c. Burn. Burn cords, resistors, capacitors, coils, wiring, and technical manuals; use gasoline, kerosene, oil, flame throwers, or incendiary grenades.

d. Bend. Bend panels and chassis.

e. Explosives. If explosives are necessary, use firearms, grenades, or TNT.

f. Disposal. Bury or scatter the destroyed parts in slit trenches, foxholes, or other holes, or throw them into streams.

g. Destroy. Destroy everything.

APPENDIX I

REFERENCES

Note.—For availability of items listed, check SR 310–20–3, SR 310–20–4, SR 310–20–5, and SR 310–20–7. Check Department of the Army Supply Manual SIG 1, for Signal Corps Supply Manuals.

1. Army Regulations

AR 380–5—— Military Security (Safeguarding Security Information).

AR 750–5—— Maintenance of Supplies and Equipment, Maintenance Responsibilities and Shop Operation.

2. Auxiliary Equipment and Test Equipment

TM 11–300—— Frequency Meter Sets SCR–211–A, B, C, D, E, F, J, K, L, M, N, O, P, Q, R, T, AA, AC, AE, AF, AG, AH, AJ, AK, AL, and AN.

TM 11–2626—— Test Unit I–176, I–176–A, and I–176–B.

TM 11–2684A—— Audio Oscillators TS–382A/U.

TM 11–4700—— Electrical Indicating and Measuring Instruments; repair instructions.

TM 11–5017—— Output Meters TS–585A/U and TS–585B/U.

TM 11–5044—— Frequency Meter TS–174B/U.

TM 11–5511—— Electronic Multimeter TS–505/U.

TM 11–5527—— Multimeter TS–352/U.

3. Painting, Preserving, and Lubrication

TB SIG 13—— Moistureproofing and Fungiproofing Signal Corps Equipment.

TB SIG 69—— Lubrication of Ground Signal Equipment.

TM 9–2851—— Painting Instructions for Field Use.

4. Camouflage, Decontamination, and Demolition

FM 5–20—— Camouflage, Basic Principles.

FM 5–25—— Explosives and Demolitions.

TM 3–20—— Decontamination.

5. Other Publications

FM 24–18—— Field Radio Techniques.

FM 72–20—— Jungle Warfare.

SR 310–20–3—— Index of Training Publications.

SR 310–20–4—— Index of Technical Manuals, Technical Regulations, Technical Bulletins, Supply Bulletins, Lubrication Orders and Modification Work Orders.

SR 310–20–5—— Index of Administrative Publications.

SR 310–20–7—— Index of Tables of Organization and Equipment, Reduction Tables, Tables of Organization, Tables of Equipment, Type Tables of Distribution, and Tables of Allowances.

SR 700–45–5—— Unsatisfactory Equipment Report (Reports Control Symbol CSGLD 247).

SR 725–405–5—— Preparation and Submission of Requisitions for Signal Corps Supplies.

SR 745–45–5, Navy Shipping Guide, Article 1850–4, AFR 71–4. Report of Damaged or Improper Shipment (Reports Control Symbols CSGLD–66 (Army), S and A–70–6 (Navy), and AF MC U2 (Air Force)).

TB SIG 4—— Methods for Improving the Effectiveness of Jungle Radio Communication.

TB SIG 25—— Preventive Maintenance of Power Cords.

TB SIG 66—— Winter Maintenance of Signal Equipment.

TB SIG 72—— Tropical Maintenance of Ground Signal Equipment.

TB SIG 75—— Desert Maintenance of Ground Signal Equipment.

TB SIG 178—— Preventive Maintenance Guide for Radio Communication Equipment.

TB SIG 219—— Operation of Signal Equipment at Low Temperatures.

TB SIG 223—— Field Expedients for Wire and Radio.

275875—53——11

TB 11 499 ( )*	Basic Radio Propagation Predictions.
TM 11 455	Radio Fundamentals.
TM 11–476	Radio Direction Finding.
TM 11–483	Suppression of Radio Noises.
TM 11–486	Electrical Communication Systems Engineering.
TM 11–496	Training Test and Applicatory Exercises for Amplitude-Modulated Radio Sets.
TM 11–499	Radio Propagation.
TM 11–661	Electrical Fundamentals (Direct Current).
TM 11–666	Antennas and Radio Propagation.
TM 11–681	Electrical Fundamentals (Alternating Current).
TM 11–4000	Trouble Shooting and Repair of Radio Equipment.

*A new TB in this series which gives propagation predictions 3 months in advance is issued monthly.

APPENDIX II

IDENTIFICATION TABLE OF PARTS

Note.—The fact that a part is listed in this table is not sufficient basis for requisitioning the item. Requisitions must cite an authorized basis, such as a specific T/O & E, T/A, SIG 7 & 8, list of allowances of expendable material, or another authorized supply basis. The Department of the Army Supply Manual applicable to the equipment covered in this manual is SIG 7 & 8–SCR–244, SIG 7 & 8–R–274/FRR, and SIG 7 & 8–R–320/FRC. For an index of available supply manuals in the Signal portion of the Department of the Army Supply Manual, see SIG 1.

1. Identification Table of Parts for Radio Set SCR–244–D

Ref symbol	Name of part and description	Function of part	Signal Corps stock No.
	RADIO SET SCR–244–D: 540 kc to 54 mc; table mtg; 12¼″ h x 21¼″ wd x 15″ d; superheterodyne.	General purpose receiving set	2S244D.
	CABLE, RF: Sig C Wire W–151; twisted pair transmission line; #18 stranded cond, 150 ft.	Antenna lead-in wire	1B151.
	CONNECTOR, adapter: Radio Frequency Adapter UG–104/U; male 1 end, female other end; 2 round male cont 1 end; 2 round female other end; 90° angle type; ⅝″ OD x 1$\frac{7}{32}$″ lg x 1$\frac{3}{16}$″ d; Sig dwg SC–D–5943.	Provides a right angle fitting between the ANT input receptacle (J1) and the antenna cable plug (P2).	2Z7390–104.
	CONNECTOR, plug: Radio Frequency Plug UG–102/U; 2 round male cont; straight type.	Antenna cable	2Z7390–102.
	CORD CD–307: headset; 5′ 5″ lg excluding terminations; Sig Dwg SC–D–2019.	Headset cord	3E1307–5.5.
	CORD, cotton: Rope RP–5; cotton; $\frac{3}{16}$″ dia	For antenna	6Z7926.
	HEADSET, electrical: Navy type #49507; magnetic type; 600-ohm impedance; o/a 2 Navy rec type #49505; 1 Navy headband type #490504; 1 Navy cord and headband covering type #49053; 1 plug JAN type P–J–054B; 2 Navy ear cushions, type #49506.	Headset	2B955.
	INSULATOR IN–124: rectangular; por; 6⅛″ lg x ½″ wd x ⅜″ thk; four ⅛″ holes; Stupakoff Ceramic Mfg. Co. #01245.	Antenna spacer	3G624.
	INSULATOR IN–125: round rod; glazed por; JAN Grade L2B per Spec JAN–I–10; 5¼″ lg x ¾″ dia; two ¼″ dia holes on 4″ ctr; ALSiMag #1141.	Antenna strain	3G625.
	PLIERS: spring compression type; 6″ lg o/a; Hammerlund part #T8222.		6R4625–3.
	RADIO RECEIVER R–483/FRR or R–483A/FRR: 540–54,000 kc range in 6 bands; ac, 95–260 v, 25–60 cycles, single ph, 130 w; mtd in table cabinet; 21⅜″ wd x 12¾″ h x 17⅛″ d.	General purpose radio communication receiver.	2C4180–483.
	WIRE W–152: electrical; ins; #12 AWG cond; seven #20 AWG strands; Belden #8006.		1B152.

2. Identification Table of Parts for Radio Receivers R–274A/FRR, R–274C/FRR, R–320A/FRC, R–483/FRR, and R–483A/FRR

Ref symbol	Model 1 R–274A/FRR	Model 2 R–274C/FRR	Model 3 R–320A/FRR	Model 4 R–483/FRR	Model 5 R–483A/FRR	Name of part and description	Function of part	Signal Corps stock No.
	(*)	(*)				RADIO RECEIVERS R–274A/FRR and R–274C/FRR: cw, mcw, and voice reception; 540 kc to 54 mc; 6 bands; 95–260 v, a-c input; 50/60 cyc, single ph, 130 w; superheterodyne ckt; turret mtd coils; built-in xtal filter; bfo; dual conversion above 7.4 mc; 6 xtal positions available for fixed freq operation; 600-ohm output; rack mtd; 21⅜″ wd x 12¾″ h x 17⅛″ d.	General purpose radio communication receiver, providing crystal-controlled reception. R–274C/FRR has provision for diversity receiving system connections.	2C4180–274A.
			(*)			RADIO RECEIVER R–320A/FRC: cw, mcw, and voice reception; 540 kc to 54 mc; 6 bands; 95 260 v a-c input, 50/60 cyc, single ph, 130 w; superheterodyne ckt; turret mtd coils; built-in xtal filter; bfo; dual conversion above 7.4 mc; 600-ohm output; table mtg, 21⅜″ wd x 12⅜″ h x 17⅛″ d.	General purpose radio communication receiver, providing diversity receiving system connections.	2C4180–320A.
				(*)	(*)	RADIO RECEIVERS R–483/FRR and R–483A/FRR: cw, mcw, and voice reception; 540–54 mc; 6 bands; 95–260 v a-c input, 25/60 cyc, single ph, 130 w; superheterodyne ckt; turret mtd coils; built-in xtal filter; bfo; dual conversion above 7.4 mc; 600-ohm output; mtd in cabinet, 21⅜″ wd x 12¾″ h x 17⅛″ d; 6 xtal positions available for fixed freq operation (R–483A/FRR only).	General purpose radio communication receiver. R–483A/FRR has provision for diversity receiving system connections.	2C4180–483.
	(*)	(*)	(*)	(*)	(*)	BRACKET: 1⁹⁄₁₆″ lg x 1¹¹⁄₁₆″ wd x 1¹³⁄₃₂″ h; Hammarlund dwg #31240.	Bfo tuning shaft	2Z1244–166.
	(*)	(*)	(*)	(*)	(*)	BRACKET: J shape; 3½″ h x ¹³⁄₁₆″ d x ½″ wd; Hammarlund dwg #31484.	Filter capacitor support	2Z1244–165.
	(*)	(*)	(*)	(*)	(*)	BRACKET: L shape; 5¹⁹⁄₃₂″ lg x 1¹⁄₁₆″ wd x ⅜″ h; Hammarlund dwg #31425.	Holds transformer	2Z1244–164.

2. Identification Table of Parts for Radio Receivers R–274A/FRR, R–274C/FRR, R–320A/FRC, R–483/FRR, and R–483A/FRR—Continued

Ref symbol	Model 1 R-274A/FRR	2 R-274C/FRR	3 R-320A/FRR	4 R-483/FRR	5 R-483A/FRR	Name of part and description	Function of part	Signal Corps stock No.
	(*)	(*)	(*)	(*)	(*)	BRACKET: irregular Y shape; 5¼″ lg x 3″ wd x ⅜″ thk; Hammarlund part/dwg #31202.	Movable support for main pointer.	2Z1244–163.
	(*)	(*)	(*)	(*)	(*)	CABLE, power: electrical; two #18 AWG stranded cond; UL type #POSJ.	Power input cable	1B3018–2.28.
C79, C80	(*)	(*)	(*)	(*)	(*)	CAPACITOR, fixed: ceramic dielectric; 5 μμf ±.25 μμf; 500 vdcw; JAN type CC21UJ050C.	V4 tank temperature compensating.	3D9005–65.
C12, C138, C145	(*)	(*)	(*)	(*)	(*)	CAPACITOR, fixed: ceramic dielectric; 7 μμf ±1 μμf; 500 vdcw; JAN type CC20CJ070F.	C12: V1 grid tank trimmer (band 5). C138: V11 plate to V14B plate coupling. C145: V11 plate to V16A grid coupling.	3D9007–45.
	(*)	—	(*)	(*)	—			
C83	(*)	(*)	(*)	(*)	(*)	CAPACITOR, fixed: mica dielectric; 10 μμf ±10%; 500 vdcw; JAN type CM20B100K.	V4 tank trimmer (band 3)	3K2010021.
C60, C88	(*)	(*)	—	—	—	CAPACITOR, fixed: ceramic dielectric; 12 μμf ±5%; 500 vdcw; JAN type CC21UF120J.	C60: V3 plate coupling C88: V4 tracking (band 4).	3D9012–59.
	(*)	(*)	(*)	(*)	(*)			
C15, C139, C145	(*)	(*)	(*)	(*)	(*)	CAPACITOR, fixed: ceramic dielectric; 15 μμf ±5%; 500 vdcw; JAN type CC20HJ150J.	C15: V1 grid tank trimmer (band 6). C139: V11 plate to V14A plate coupling. C145: V11 grid circuit to V16A grid coupling.	3D9015–142.
	(*)		(*)	(*)				
		(*)	—	—	(*)			
C6, C30, C50	(*)	(*)	(*)	(*)	(*)	CAPACITOR, fixed: mica dielectric; 20 μμf ±5%; 500 vdcw; JAN type CM20C200J.	C6: V1 grid tank trimmer (band 3). C30: V2 grid tank trimmer (band 3). C50: V5 control grid tank trimmer (band 3).	3K2020032.
C130	(*)	(*)	(*)	(*)	(*)	CAPACITOR, fixed: ceramic dielectric; 27 μμf ±5%; 500 vdcw; JAN type CC21UJ270J.	V13 tank	3D9027–30.
C9, C33, C53	(*)	(*)	(*)	(*)	(*)	CAPACITOR, fixed: mica dielectric; 33 μμf ±5%; 500 vdcw; JAN type CM20C330J.	C9: V1 grid trimmer (band 4). C33: V2 grid tank trimmer (band 4). C53: V5 control grid tank trimmer (band 4).	3K2033032.
C63	(*)	(*)	—	—	—	CAPACITOR, fixed: mica dielectric; 39 μμf ±5%; 500 vdcw; JAN type CM20C390J.	V3 oscillator plate (screen grid) r-f bypass.	3K2039032.
C95	(*)	—	(*)	(*)	—	CAPACITOR, fixed: mica dielectric; 42 μμf ±1%; 500 vdcw; Aerovox type #1469.	V4 tank trimmer (band 6)	3D9042.

2. Identification Table of Parts for Radio Receivers R–274A/FRR, R–274C/FRR, R–320A/FRC, R–483/FRR, and R–483A/FRR—Continued

Ref symbol	Model 1 R–274A/FRR	Model 2 R–274C/FRR	Model 3 R–320A/FRR	Model 4 R–483/FRR	Model 5 R–483A/FRR	Name of part and description	Function of part	Signal Corps stock No.
C92, C138, C139	(*)	(*)	(*)	(*)	(*)	CAPACITOR, fixed: ceramic dielectric; 51 μμf ±1%; 500 vdew; JAN type CC21UJ510F.	C92: V4 tank padder (band 5). C138: V11 plate to V14B plate coupling. C139: V11 plate to V14A plate coupling.	3D9051–30.
		(*)			(*)			
		(*)			(*)			
C39, C59, C99, C134, C95.	(*)	(*)	(*)	(*)	(*)	CAPACITOR, fixed: mica dielectric; 51 μμf ±2%; 500 vdew; JAN type CM20C510G.	C39: V2 grid tank trimmer (band 6). C59: V5 control grid tank trimmer (band 6). C99: V6 grid tank. C134: V13 grid leak network. C95: V4 tank trimmer (band 6).	3K2051033.
		(*)			(*)			
C97	(*)	(*)	(*)	(*)	(*)	CAPACITOR, fixed: mica dielectric; 65 μμf ±2 μμf; 500 vdew; Aerovox type #1469 (special).	T2 tank	3D9065–7.
C37, C57, C67	(*)		(*)	(*)		CAPACITOR, fixed: mica dielectric; 85 μμf ±2%; 500 vdew; Aerovox #1469.	C37: V2 grid tank trimmer (band 5). C57: V5 control grid tank trimmer (band 5). C67: V5 plate tank (double conversion).	3DK9085–7.
	(*)	(*)	(*)	(*)	(*)			
C91	(*)		(*)	(*)		CAPACITOR, fixed: mica dielectric; 91 μμf ±2%; 500 vdew; JAN type CM30C-91DG.	V4 tank trimmer (band 5)	3K2091033.
C18, C25, C75, C110, C112, C113, C37, C57, C91, C45.	(*)	(*)	(*)	(*)	(*)	CAPACITOR, fixed: mica dielectric; 100 μμf ±2%; 500 vdew; JAN type CM20C101G.	C18: V1 grid d-c blocking. C25: V2 grid d-c blocking. C75: V5 oscillator grid d-c blocking. C110 and C112: I-f filter networks. C113: V9 input coupling. C37: V2 grid tank trimmer (band 5). C57: V5 signal grid tank trimmer (band 5). C91: V4 tank trimmer (band 5). C45: V5 control grid d–c blocking.	3K2010133.
		(*)			(*)			
	(*)		(*)	(*)				
C141, C142	(*)	(*)	(*)	(*)	(*)	CAPACITOR, fixed: ceramic dielectric; 100 μμf ±10%; 500 vdew; JAN type CC265L101K.	V14A load filters	3D9100–204.
C87	(*)	(*)	(*)	(*)	(*)	CAPACITOR, fixed: mica dielectric; 120 μμf ±2%; 500 vdew; JAN type CM20C121G.	V4 tank trimmer (band 4)	3K2012133.

2. Identification Table of Parts for Radio Receivers R-274A/FRR, R-274C/FRR, R-320A/FRC, R-483/FRR, and R-483A/FRR—Continued

Ref symbol	Model 1 R-274A/FRR	2 R-274C/FRR	3 R-320A/FRR	4 R-483/FRR	5 R-483A/FRR	Name of part and description	Function of part	Signal Corps stock No.
C89	(*)	(*)	(*)	(*)	(*)	CAPACITOR, fixed: mica dielectric; 190 μμf ±1%; 500 vdcw; Aerovox type #1469.	V4 tank padder (band 4)	3D9190-4.
C69, C107, C117, C124.	(*)	(*)	(*)	(*)	(*)	CAPACITOR, fixed: mica dielectric; 220 μμf ±2%; 500 vdcw; JAN type CM20D221G.	C69: V5 plate tank (single conversion). C107: V6 plate tank. C117: V9 plate tank. C124: V10 plate tank.	3K2022143.
C114	(*)	(*)	(*)	(*)	(*)	CAPACITOR, fixed: mica dielectric; 270 μμf ±2%; 500 vdcw; JAN type CM20D271G.	V9 grid tank	3K2027143.
C119, C125	(*)	(*)	(*)	(*)	(*)	CAPACITOR, fixed: mica dielectric; 300 μμf ±2%; 500 vdcw; JAN type CM20C301G.	C119: V10 grid tank C125: V11 grid tank.	3K2030133.
C93	(*)	(*)	(*)	(*)	(*)	CAPACITOR, fixed: mica dielectric; 379 μμf ±2%; 500 vdcw; Aerovox type #1469.	V4 tank padder (band 5)	3D9379.
C78	(*)	(*)	(*)	(*)	(*)	CAPACITOR, fixed: mica dielectric; 404 μμf ±1%; 500 vdcw; Aerovox type #1469.	V4 tank padder (band 1)	3D9404.
C131, C133, C140, C164.	(*) --- ---	(*) (*) ---	(*) --- ---	(*) --- ---	(*) (*) (*)	CAPACITOR, fixed: mica dielectric; 430 μμf ±2%; 500 vdcw; JAN type CM20C431G.	C131: V13 tank C133: V13 plate d-c blocking. C140 and C164: V14B ave line filters.	3K2043133.
C96	(*)	(*)	(*)	(*)	(*)	CAPACITOR, fixed: mica dielectric; 610 μμf ±1%; 500 vdcw; Aerovox type #1464.	V4 tank padder (band 6)	3D9610.
C82	(*)	(*)	(*)	(*)	(*)	CAPACITOR, fixed: mica dielectric; 820 μμf ±2%; 500 vdcw; JAN type CM30C821G.	V4 tank padder (band 2)	3K3082133.
C14	(*)	(*)	(*)	(*)	(*)	CAPACITOR, fixed: mica dielectric; 1000 μμf ±2%; 500 vdcw; JAN type CM20D102G.	V1 grid tank padder (band 5).	3K3010243.
C140	(*)	---	(*)	(*)		CAPACITOR, fixed: mica dielectric; 1000 μμf ±10%; 500 vdcw; JAN type CM35B102K.	V14B ave line filter	3K3510221.
C85	(*)	(*)	(*)	(*)	(*)	CAPACITOR, fixed: mica dielectric; 1200 μμf ±2%; 500 vdcw; JAN type CM30D122G.	V4 tracking (band 3)	3K3012243.
C120, C126	(*)	(*)	(*)	(*)	(*)	CAPACITOR, fixed: mica dielectric; 1300 μμf ±2%; 500 vdcw; JAN type CM30C132G.	C120: V10 grid tank C126: V11 grid tank.	3K3013233.
C11, C17, C35, C55.	(*)	(*)	(*)	(*)	(*)	CAPACITOR, fixed: mica dielectric; 1500 μμf ±2%; 500 vdcw; JAN type CM30D152G.	C11: V1 grid tank padder (band 4). C17: V1 grid tank padder (band 6). C35: V1 plate tank tracking (band 4). C55: V2 plate tank tracking (band 4).	3K3015243.

2. Identification Table of Parts for Radio Receivers R–274A/FRR, R–274C/FRR, R–320A/FRC, R–483/FRR, and R–483A/FRR—Continued

Ref symbol	Model 1 R-274A/FRR	Model 2 R-274C/FRR	Model 3 R-320A/FRR	Model 4 R-483/FRR	Model 5 R-483A/FRR	Name of part and description	Function of part	Signal Corps stock No.
C62	(*)	(*)				CAPACITOR, fixed: mica dielectric; 2200 μμf ±5%, 500 vdcw; JAN type CM30D222J.	V3 oscillator plate (screen grid) feedback.	3K3022242.
C8, C32, C52, C132.	(*)	(*)	(*)	(*)	(*)	CAPACITOR, fixed: mica dielectric; 2400 μμf ±5%; 500 vdcw; JAN type CM30D242J.	C8: V1 grid tank padder (band 3). C32: V1 plate tank tracking (band 3). C52: V2 plate tank tracking (band 3). C132: V13 tank.	3K3024242.
C150	(*)	(*)	(*)	(*)	(*)	CAPACITOR, fixed: mica dielectric; 2500 μμf ±10%; 800 vdcw; Aerovox type #1441–WP.	V17 plate high audio frequency bypass.	3DA2.500–40.
C77	(*)	(*)	(*)	(*)	(*)	CAPACITOR, fixed: mica dielectric; 3300 μμf ±2%; 500 vdcw; JAN type CM30D332G.	V4 tank tracking (band 1)	3K3033243.
C143, C147, C149.	(*)	(*)	(*)	(*)	(*)	CAPACITOR, fixed: mica dielectric; 5100 μμf ±5%; 500 vdcw; JAN type CM35B512J.	C143: V16B input coupling C147: V16A cathode coupling. C149: V16B plate coupling.	3K3551222.
C3, C5, C19 through C24, C27, C29, C40 through C44, C47, C49, C66, C68, C70 through C74, C105, C115, C116, C121, C122, C127, C135, C153, C154, C155, C61, C64, C100.	(*)	(*)	(*)	(*)	(*)	CAPACITOR, fixed: paper dielectric; 10,000 μμf −10+20%; Aerovox type #P488.	C3: V1 grid tank padder (band 1). C5: V1 grid tank padder (band 2). C19: V1 grid circuit decoupling. C20: V1 screen grid r-f bypass. C21: V1 screen grid circuit decoupling. C22: V1 plate return r-f bypass. C23: V1 plate and screen grid circuits decoupling. C24: V1 plate coupling. C27: V1 plate tank tracking (band 1). C29: V1 plate tank tracking (band 1). C40: V2 grid circuit decoupling. C41: Ave line filter. C42: V2 screen grid r-f bypass. C43: V2 plate circuit decoupling.	3DA10–567.

2. Identification Table of Parts for Radio Receivers R–274A/FRR, R–274C/FRR, R–320A/FRC, R–483/FRR, and R–483A/FRR—Continued

Ref symbol	Model 1 R–274A/FRR	Model 2 R–274C/FRR	Model 3 R–320A/FRR	Model 4 R–483/FRR	Model 5 R–483A/FRR	Name of part and description	Function of part	Signal Corps stock No.
C262, C263, C264, C165, C166 (In serial No. 487 and higher).	---	---	(*)	---	---		C44: V2 plate coupling.	
	---	---	(*)	---	---		C47: V2 plate tank tracking (band 1).	
	---	---	(*)	---	---		C49: V2 plate tank tracking (band 2).	
	---	(*)	---	---	---		C66: V5 cathode r-f bypass.	
	---	(*)	---	---	---		C68: V5 screen grid r-f bypass.	
							C70: V5 plate circuit decoupling.	
							C71 and C72: V4 plate circuit decoupling.	
							C73: V5 plate and screen circuits decoupling.	
							C74: V4 plate coupling.	
							C105: V7 screen grid r-f bypass.	
							C115: V9 grid circuit decoupling.	
							C116: V9 screen grid r-f bypass.	
							C121: V10 grid circuit decoupling.	
							C122: V10 screen grid r-f bypass.	
							C127: V11 grid circuit decoupling.	
							C135: V12 screen grid r-f bypass.	
							C153: V1 and V2 filament circuits filter.	
							C154: V1, V2, V4, and V5 filament circuits filter.	
							C155: V4 and V5 filament circuits filter.	
							C61: V3 plate circuit decoupling.	
							C64: V3 screen grid circuit decoupling.	
							C100: V7 grid circuit decoupling.	
							C262: V9 cathode bypass.	
							C263: V9 and V10 cathode filter circuits.	
							C264: V10 cathode bypass.	

2. Identification Table of Parts for Radio Receivers R–274A/FRR, R–274C/FRR, R–320A/FRC, R–483/FRR, and R–483A/FRR—Continued

Ref symbol	Model 1 R 274A FRR	Model 2 R 274C FRR	Model 3 R 320A FRR	Model 4 R 483 FRR	Model 5 R 483A FRR	Name of part and description	Function of part	Signal Corps stock No.
C262, C263, C264, C165, C166—Con.	---	---	---	---	---	---	C165: V7 grid circuit decoupling in serial No. 1570 and higher. V1 and V2 plate circuits decoupling from serial No. 487 through 1569. C166: V2 screen grid circuit decoupling.	
C152, C168, C169 (In serial No. 487 and higher).	---	(*)	---	---	---	CAPACITOR, fixed: mica dielectric; 10,000 μμf ±5%; 500 vdcw; Jan type CM35B103J.	C152: A-c line filter. C168: A-c line filter. C169: Ave time constant.	3K3510322.
C98, C102, C103, C104, C106, C108, C109, C118, C123, C136, C146, C148, C156, C157, C162, C167 (serial No. 487 and higher).	(*)	(*)	(*)	(*)	(*)	CAPACITOR, fixed: paper dielectric; 22,000 μμf ±20%; 400 vdcw; Aerovox type #P488.	C98: V6 grid circuit decoupling. C102: V7 screen grid circuit decoupling or V8 plate circuit decoupling. C103: V8 plate circuit decoupling. C104: V8 plate circuit r-f bypass. C106: V6 screen grid r-f bypass. C108 and C109: V6 plate circuit decoupling. C118: V9 plate circuit decoupling. C123: V10 plate circuit decoupling. C136: V13 plate circuit decoupling. C146: V16A plate r-f bypass. C148: V16B plate circuit decoupling. C156 and C157: V6 and V8 filament circuit filters. C162: V14B cathode r-f bypass. C167: V5 plate and screen circuits decoupling.	3DA22–16.
C144	(*)	(*)	(*)	(*)	(*)	CAPACITOR, fixed: paper dielectric; 50,000 μμf ±20%; 600 vdcw; JAN type CP28-A1EF503M.	V15 noise filter.	3DA50–406.

2. Identification Table of Parts for Radio Receivers R–274A/FRR, R–274C/FRR, R–320A/FRC, R–483/FRR, and R–483A/FRR—Continued

Ref symbol	Model 1 R-274A/FRR	2 R-274C/FRR	3 R-320A/FRR	4 R-483/FRR	5 R-483A/FRR	Name of part and description	Function of part	Signal Corps stock No.
C129A, C129B, C152A, C152-B (In R–274C/FRR serial No. 1 thru 486 only).	(*)	(*)	(*)	(*)	(*)	CAPACITOR, fixed: paper dielectric; 2 sects.; 50,000 μμf +20% −10% ea sect.; 600 vdcw ea sect.; JAN type CP53B4EF503V.	C129A: V11 screen grid r-f bypass. C129B: V11 plate circuit decoupling. C152A and C152B: A-c line filters.	3DA50–324.
C137	(*)	(*)	(*)	(*)	(*)	CAPACITOR, fixed: paper dielectric; 250,000 μμf ±20%; 600 vdcw; JAN type CP28-A1EF254M.	Increases time constant of avc during bfo operation.	3DA250–445.
C163	---	(*)	---	---	(*)	CAPACITOR, fixed: paper dielectric; 250,000 μμf ±10%; 600 vdcw; JAN type CP27-A2EF254K.	V1 and V2 plate circuit decoupling.	3DA250–641.
C128, C151, C158, C159, C160.	(*)	(*)	(*)	(*)	(*)	CAPACITOR, fixed: electrolytic; 10 μf; 100 vdcw; JAN type CE63C100H.	C128: V11 grid bias filter C151: V17 cathode a-f bypass. C158, C159, and C160: Bias supply filters.	3DB10–165.
C161A, C161B, C161C.	(*)	(*)	(*)	(*)	(*)	CAPACITOR, fixed: electrolytic; 3 sects.; 20 μf ea sect.; 450 vdcw ea sect.; JAN type CE33F200R.	B+ filters	3DB20–132.
C111	(*)	(*)	(*)	(*)	(*)	CAPACITOR, variable: air dielectric; plate meshing type; 2 sects.; 3.5–8 μμf; 1 5/16" lg x 1 5/16" wd x 1 5/8" h; Hammarlund part/dwg #11776–G1.	XTAL PHASING control	3D9008V–14.
C65	(*)	(*)	---	---	---	CAPACITOR, variable: air dielectric; plate meshing type; single sect.; 4.6–75 μμf; 1 1/4" lg x 1" wd x 1 1/16" d; Hammarlund type #MAPC75.	Δ FREQ control	3D9070V–47.
C1A through C1H.	(*)	(*)	(*)	(*)	---	CAPACITOR, variable: air dielectric; plate meshing type; 8 sects.; 12–154 μμf per sect.; 9 5/8" lg to 3 1/8" wd x 2 5/8" h; Hammarlund part #34001–G1.	TUNING control	3D9152V–3.
	(*)	(*)	---	---	---	CHART: freq control calibration; 1 15/32" lg x 1 3/16" wd x .300" thk; Hammarlund dwg #31463.	Frequency control calibration.	6D10105–54.
	(*)	(*)	(*)	(*)	---	CLAMP: 5/8" lg x 3/8" wd x 3/32" h; accom 3/16" dia cable; Zierick type #139.	Holds connecting leads in place.	2Z2636–13.
	(*)	(*)	(*)	(*)	---	CLAMP: 3/4" lg x 1/4" wd x .032" thk; accom 1/4" dia cable; Zierick part #78	Holds cable	2Z2636–6.

2. Identification Table of Parts for Radio Receivers R–274A/FRR, R–274C/FRR, R–320A/FRC, R–483/FRR, and R–483A/FRR—Continued

Ref symbol	Model 1 R-274A FRR	2 R-274C FRR	3 R-320A FRR	4 R-483 FRR	5 R-483A FRR	Name of part and description	Function of part	Signal Corps stock No.
C1A through S1H—Con.	(*)	(*)	(*)	(*)	(*)	CLAMP: ¾″ lg x ⅜″ wd x ½″ h; accom .405″ dia cable; Zierick part #79.	Holds cable	2ZK2600.1.
	(*)	(*)	(*)	(*)	(*)	CLAMP: approx 1⅜″ ID x ⅜″ wd; accom 1⅜″ dia cap; Hammarlund part/dwg #31485.	Holds filter capacitor	2Z2642.448.
		(*)			(*)	CLIP, electrical: spring type; beryllium copper, nickel pl; 29/64″ lg x 11/32″ wd x 5/16″ h; Littelfuse type #121001.	For spare fuses	3Z1013.6.
	(*)	(*)	(*)	(*)	(*)	CLIP: 1 term. spring type; 1″ lg x ⅜″ wd; Birnback part #32.	Wrench mounting clip	2Z2712.246.
	(*)	(*)	(*)	(*)	(*)	CLIP: 2 term. spring type; 1¾″ lg x ⅜″ wd; Birnback part #33.	Wrench mounting clip	2Z2712.238.
L47	(*)	(*)	(*)	(*)	(*)	COIL, RF: choke; 3.8 mh; unshielded; ⅞″ lg x 33/64″ dia; Hammarlund part #15616.	V11 plate r-f choke	3C308–21.
L21	(*)	(*)				COIL, RF: choke; 1 mh, unshielded, 1″ lg x 7/16″ dia, Hammarlund part #15617.	V3 plate r-f choke	3C308–23.
L48	(*)	(*)	(*)	(*)	(*)	COIL, RF: choke, 22 uh, unshielded, 1″ lg x ¼″ dia; Hammarlund dwg #15611.	V1 and V2 filament circuit r-f filter.	3C323–192R.
L22	(*)	(*)				COIL, RF: choke; 10 mh; unshielded; 1½″ lg x ¾″ dia; Miller JW part #4540.	V3 plate r-f choke	3C342–8.
L49, L50	(*)	(*)	(*)	(*)	(*)	COIL, RF: choke; 26 uh; unshielded; 1″ lg x ¼″ dia; Hammarlund part/dwg #15613.	L49: V4 and V5 filament circuit r-f filter. L50: V6 and V8 filament circuit r-f filter.	3C323–192S.
L7, L14, L24, L35, L54, L55.	(*)	(*)	(*)	(*)	(*)	COIL, RF: choke; 192 uh; unshielded; ¾″ lg x ⅜″ dia; Hammarlund part #15612.	L7: V1 plate r-f choke L14: V2 plate r-f choke L24: V4 plate r-f choke L35: V8 plate r-f choke.	3C308–22.
			(*)				L54 and L55: V9 and V10 cathode filter circuits.	
P/O L30	(*)	(*)	(*)	(*)	(*)	COIL, RF: osc; unshielded; 17/16″ lg x ½″ dia; Hammarlund dwg #32160.	V4 tank (band 6)	3C1081–8J.
P/O L29	(*)	(*)	(*)	(*)	(*)	COIL, RF: osc; unshielded; 17/16″ lg x ½″ dia; Hammarlund dwg #31257.	V4 tank (band 5)	3C1081–8H.
P/O L28	(*)	(*)	(*)	(*)	(*)	COIL, RF: osc; unshielded; 17/16″ lg x ½″ dia; Hammarlund dwg #31254.	V4 tank (band 4)	3C1081–8G.
L23	(*)	(*)				COIL, RF: 25 mh; unshielded; 17/16″ lg x 13/16″ dia, Miller JW part #4541.	V3 screen grid r-f choke	3C342.

2. Identification Table of Parts for Radio Receivers R–274A/FRR, R–274C/FRR, R–320A/FRC, R–483/FRR, and R–483A/FRR—Continued

Ref symbol	Model 1 R–274A/FRR	Model 2 R–274C/FRR	Model 3 R–320A/FRR	Model 4 R–483/FRR	Model 5 R–483A/FRR	Name of part and description	Function of part	Signal Corps stock No.
P3	(*)	(*)	(*)			CONNECTOR, ADAPTER: Radio Frequency Adapter UG–104/U; 2 round male cont 1 end, 2 round female cont other end; 90° angle type $\frac{5}{8}$'' x $1\frac{7}{32}$'' lg x $1\frac{3}{16}$'' d.	Provides a right angle fitting between ANT input receptacle J1 and antenna cable plug P2.	2Z7390–104.
P1	(*)	(*)	(*)	(*)	(*)	CONNECTOR, PLUG: Plug PL–259–A; 1 round male cont; straight type; $1\frac{21}{32}$'' lg x $1\frac{1}{16}$'' OD 1 end, $\frac{1}{2}$'' OD other end.	Provides means of connecting cable to IF output receptacle J2.	2Z7726–259A.
P1	(*)	(*)	(*)	(*)	(*)	CONNECTOR, PLUG: 2 parallel blade male cont; straight type; JAN type 438.	A-c line input	6Z1727.
P2	(*)	(*)	(*)			CONNECTOR, PLUG: Radio Frequency Plug UG–102/U; 2 round male cont; straight type; $1\frac{1}{2}$'' lg x $\frac{3}{4}$'' dia.	Antenna cable	2Z7390–102.
J2	(*)	(*)	(*)	(*)	(*)	CONNECTOR, receptacle: Socket SO–239: 1 round female cont; straight type; 1'' sq x $1\frac{1}{16}$'' lg.	IF OUTPUT	2Z8799–239.
J1	(*)	(*)	(*)	(*)	(*)	CONNECTOR, receptacle: Radio Frequency Receptacle UG–103/U; 2 round female cont; pol; straight type; 1'' sq x $1\frac{1}{16}$'' lg.	ANT input	2Z7390–103.
J4, J5	(*)	(*)	(*)	(*)	(*)	CONNECTOR, receptacle: 2 flat female cont; straight type; $1\frac{3}{16}$'' lg x $1\frac{9}{16}$'' wd x $\frac{3}{8}$'' h; Alden part #402AC.	J4: Disabling RELAY J5: AC outlet.	2Z3010.27.
	(*)	(*)	(*)	(*)	(*)			
	(*)	(*)			(*)	CONTACT, electrical: spring leaf type; $3\frac{1}{32}$'' lg x $\frac{1}{2}$'' wd x .239'' h; Hammarlund part #31089–1.		2Z3194–88.
	(*)	(*)			(*)	CONTACT, electrical: spring leaf type; $1\frac{15}{32}$'' lg x $\frac{1}{2}$'' wd x .010'' thk; Hammarlund part/dwg #31023–1.	Ground for i-f transformer shields.	2Z3194–87.
S1A through S1D.	(*)	(*)	(*)	(*)	(*)	CONTACT ASSEMBLY, electrical: $2\frac{3}{4}$'' lg x $1\frac{5}{8}$'' wd x $\frac{1}{4}$'' thk; Hammarlund part #31234.	Part of r-f amplifier input switch.	3Z9908–1.1.
	(*)	(*)	(*)	(*)	(*)	CORE, adjustable tuning: $1\frac{1}{8}$'' x .250'' dia; Crowley HL type #D–I.	Tune r-f coils	2Z3262–83.
	(*)	(*)				COUPLING, shaft: flexible; $1\frac{1}{8}$'' dia x $\frac{3}{4}$'' lg; Hammarlund part #PL–415–3.	Coupling between XTAL PHASING control and panel knob dial shaft.	2Z3295–181.

2. Identification Table of Parts for Radio Receivers R–274A/FRR, R–274C/FRR, R–320A/FRC, R–483/FRR, and R–483A/FRR—Continued

Ref symbol	Model 1 R-274A/FRR	2 R-274C/FRR	3 R-320A/FRR	4 R 483 FRR	5 R-483A/FRR	Name of part and description	Function of part	Signal Corps stock No.
S1A through S1D—Con.	(*)	(*)	(*)	(*)	(*)	COUPLING, shaft: flexible; 1⅛″ dia x ¾″ lg; Hammarlund part #PL–415–2.	Coupling between SELECTIVITY switch and panel knob dial shaft.	2Z3295–194.
	(*)	(*)				COUPLING, shaft: rigid; sleeve type; ¼″ dia shaft size ea end; 11/16″ lg x ½″ dia; Hammarlund part/dwg #31275.	H-f crystal oscillator shaft coupling.	2Z3273–241.
V8		(*)			(*)	CRYSTAL UNIT, quartz: 1 xtal plate; 455 kc nom freq; 13/16″ lg x 23/32″ wd x 5/16″ h; Bliley Elec part #VX–4.	I-f (455-kc) selectivity	2Z222.1–455.
	(*)	(*)	(*)	(*)	(*)	COVER, fuse: polystyrene; 3½″ lg x 1⅛″ wd x ⅝″ d; Houston Corp part #2034195.	Spare fuses cover	3Z1723–9
Y7	(*)	(*)	(*)	(*)	(*)	CRYSTAL UNIT, quartz: 1 xtal plate; 3500 kc nom freq; .740″ lg x .625″ wd x .335″ thk; Bliley Elec type #VX2.	V8 oscillator	2X228–3500.
	(*)	(*)	(*)	(*)	(*)	DIAL, control: knob type; 2⅜″ dia x 1″ h; GE part/dwg #31227–G2.	For audio gain control	2Z3723–295.
	(*)	(*)	(*)	(*)	(*)	DIAL, control: knob type; 2⅜″ dia x 1″ h; GE part/dwg #31227–G4.	For beat oscillator control	2Z3723–293.
	(*)	(*)	(*)	(*)	(*)	DIAL, control: knob type; 2⅜″ dia x 1″ h; GE part/dwg #31227–G1.	For r-f gain control	2Z3723–294.
	(*)	(*)	(*)	(*)	(*)	DIAL, control: knob type; 2⅜″ dia x 1″ h; GE part/dwg #31227–G5.	For selectivity switch	2Z3723–297.
	(*)	(*)	(*)	(*)	(*)	DIAL, control: knob type; 2⅜″ dia x 1″ h; GE part/dwg #31227–G3.	For crystal phasing control	2Z3723–296.
V18	(*)	(*)	(*)	(*)	(*)	ELECTRON TUBE: Type OA2.	Voltage regulator	2JOA2.
V19	(*)	(*)	(*)	(*)	(*)	ELECTRON TUBE: Type 5R4WGY.	B+ rectifier.	2J5R4WGY.
V3	(*)	(*)				ELECTRON TUBE: Type 6AC7W.	H-f crystal oscillator	2J6AC7W.
V1, V2, V7, V9 through V12.	(*)	(*)	(*)	(*)	(*)	ELECTRON TUBE: Type 6BA6.	V1: First r-f amplifier V2: Second r-f amplifier. V7: 455-kc i-f gate. V9: First i-f amplifier. V10: Second i-f amplifier. V11: I-f driver. V12: Bfo buffer amplifier.	2J6BA6.
V5, V6	(*)	(*)	(*)	(*)	(*)	ELECTRON TUBE: Type 6BE6.	V5: First mixer V6: Second mixer.	2J6BE6.

2. Identification Table of Parts for Radio Receivers R–274A/FRR, R–274C/FRR, R–320A/FRC, R–483/FRR, and R–483A/FRR—Continued

Ref symbol	Model 1 R-274A/FRR	2 R-274C/FRR	3 R-320A/FRR	4 R-483/FRR	5 R-483A/FRR	Name of part and description	Function of part	Signal Corps stock No.
V4, V8, V13	(*)	(*)	(*)	(*)	(*)	ELECTRON TUBE: Type 6C4.	V4: Vfo. V8: 3.5-mc crystal oscillator. V13: Bfo.	2J6C4.
V17	(*)	(*)	(*)	(*)	(*)	ELECTRON TUBE: Type 6V6GTY.	Audio output	2J6V6GTY.
V16	(*)	(*)	(*)	(*)	(*)	ELECTRON TUBE: Type 12AU7.	V16: Cathode follower and first audio amplifier.	2J12AU7.
V14, V15, V20	(*)	(*)	(*)	(*)	(*)	ELECTRON TUBE: Type 5726/6AL5W.	V14: Detector and avc rectifier. V15: Noise limiter and a-f output, meter rectifier. V20: Bias rectifier.	2J6AL5W.
	(*)	(*)	(*)	(*)	(*)	ESCUTCHEON: dial type, $4\frac{1}{16}$'' sq x $1\frac{1}{8}$'' d, Hammarlund part/dwg #31283.	For main tuning dial	2Z4100-23.
	(*)	(*)	(*)	(*)	(*)	FLYWHEEL: 3'' dia x $\frac{29}{32}$'' thk, Hammarlund part/dwg #31169.	Balance wheel for TUNING control.	2Z4395–2.
F2			(*)	(*)		FUSE, cartridge: ¼ amp, 250 v, 2 pigtail wire lead mtg; $1\frac{3}{8}$'' lg x ¼'' dia; Bussman type #GJV–¼.	B+ supply	3Z2592E5.
F2	(*)	(*)			(*)	FUSE, cartridge: 1 time; ⅜ amp 250 v, $1\frac{1}{4}$'' lg x ¼'' dia; Buss type MDL–⅜.	B+ supply	3Z2588.2.
F1 (in serial No. 487 and higher).		(*)				FUSE, cartridge: 1.6 amp 125 v; $1\frac{1}{4}$'' lg x ¼'' dia; Littlefuse part/dwg #31301.6.	A-c line	3Z2601F6.
F1 (in R–274C/FRR serial No. 1 through 486).	(*)	(*)	(*)	(*)	(*)	FUSE, cartridge: 3 amp 250 v, $1\frac{1}{4}$'' lg x ¼'' dia; Buss #AGC3.	A-c line	3Z2603.2.
F1, F2	(*)	(*)	(*)	(*)	(*)	FUSEHOLDER: extractor post type, accom fuse $1\frac{1}{4}$'' lg x ¼'' dia; $2\frac{17}{64}$'' lg x $1\frac{1}{16}$'' dia; Buss type #HKP–B–L.	Hold FUSE F1 and F2 (as applicable).	3Z3282–42.9.
	(*)	(*)	(*)	(*)	(*)	GEAR: spur type 24 teeth; $\frac{53}{64}$'' OD x $\frac{3}{16}$'' thk; Hammarlund part/dwg #31039.	Dial mechanism	2Z4878–1370.
	(*)	(*)	(*)	(*)	(*)	GEAR: spur type; 36 teeth; $1\frac{3}{16}$'' OD x $\frac{3}{16}$'' thk; Hammarlund part/dwg #31027.	Turret mechanism	2Z4878–1369.
	(*)	(*)	(*)	(*)	(*)	GEAR: spur; 36 teeth; $1\frac{3}{16}$'' OD x $\frac{3}{16}$'' thk; Hammarlund part/dwg #31040.	Dial mechanism	2Z4878–1365.
	(*)	(*)	(*)	(*)	(*)	GEAR: spur type; 48 teeth; $1\frac{1}{8}$'' OD x ⅛'' thk; Hammarlund #31033.	Dial mechanism	2Z4878–1367.

2. Identification Table of Parts for Radio Receivers R–274A/FRR, R–274C/FRR, R–320A/FRC, R–483/FRR, and R–483A/FRR—Continued

Ref symbol	Model 1 R 274A/FRR	Model 2 R 274C/FRR	Model 3 R 320A/FRR	Model 4 R 483/FRR	Model 5 R 483A/FRR	Name of part and description	Function of part	Signal Corps stock No.
F1, F2—Con.	(*)	(*)	(*)	(*)	(*)	GEAR: spur type; 48 teeth; 1⅛″ OD x ⅛″ thk; Hammarlund part/dwg #K–31096–1.	Antibacklash spider idler	2Z4878–1406.
	(*)	(*)	(*)	(*)	(*)	GEAR: spur; 48 teeth 1⅛″ OD x ⅛″ thk; Hammarlund part/dwg #31096–1.	Dial mechanism	2Z4878–1476.
	(*)	(*)	(*)	(*)	(*)	GEAR: spur type; 83 teeth; 2″ OD x 1/16″ thk; Hammarlund part/dwg #K–31098–1.	Dial mechanism	2Z4878–1405.
	(*)	(*)	(*)	(*)	(*)	GEAR: spur; 83 teeth; 2″ OD x 3/16″ thk; Hammarlund part/dwg #31034.	Dial mechanism	2Z4878–1366.
	(*)	(*)	(*)	(*)	(*)	GEAR: spur; 93 teeth; 2″ OD x 1/16″ thk; Hammarlund part/dwg #31097–1.	Dial mechanism	2Z4875–1477.
	(*)	(*)	(*)	(*)	(*)	GEAR: spur type; 144 teeth; 4 9/16″ OD x 1/16″ thk; Hammarlund part/dwg #31036.	Turret mechanism	2Z4878–1368.
	(*)	(*)	(*)	(*)	(*)	GEAR: spur; 168 teeth; Hammarlund part/dwg #31032.		2Z4878–1364.
	(*)	(*)	(*)	(*)	(*)	GEAR: 3 15/32″ lg x .750″ dia; Hammarlund part/dwg #K–31052–1.	Dial mechanism	2Z4872–244.
	(*)	(*)	(*)	(*)	(*)	GEAR: 2″ lg x 3½″ dia; Hammarlund part/dwg #K–31150–1.	Dial mechanism	2Z4872–243.
	(*)	(*)	(*)	(*)	(*)	GEAR: 3 3/16″ lg x 1⅛″ wd x .712″ thk; Hammarlund part/dwg #K31095–1.	Dial mechanism	2Z4872–245.
	(*)	(*)	(*)	(*)	(*)	GEAR ASSEMBLY: 1 3/16″ dia x 1.647″ lg; Hammarlund part/dwg #31288–1.	Band change dial drive	2Z4878–444.
	(*)	(*)	(*)	(*)	(*)	GEAR ASSEMBLY: 13/16″ dia x 2 21/32″ lg; Hammarlund part/dwg #31052–1.	Band change assembly	2Z4878–439.
	(*)	(*)	(*)	(*)	(*)	GEAR ASSEMBLY: 1⅝″ lg x 1 1/16″ wd x 23/32″ d; Hammarlund part/dwg #31095–1.	Vernier dial	2Z4875–440.
	(*)	(*)	(*)	(*)	(*)	GEAR ASSEMBLY: 3½″ dia x 25/64″ d, approx; Hammarlund part/dwg #31098.	Dial assembly to main tuning capacitor.	2Z4875–441.
	(*)	(*)	(*)	(*)	(*)	GEAR ASSEMBLY: 3 9/16″ dia x 2″ d; Hammarlund part/dwg #31150–1.	Drive assembly for gang	2Z4875–442.
	(*)	(*)	(*)	(*)	(*)	GEAR ASSEMBLY: 1⅞″ lg x 1½″ wd x ½″ thk; Hammarlund part/dwg #31287–1.	Coupling between rotor band change drive and rotor proper.	2Z4875–443.
	(*)	(*)	(*)	(*)	(*)	GEAR ASSEMBLY: 1.647″ lg x 1 3/16″ dia; Hammarlund part/dwg #31288–1.	Band change dial drive	2Z4875–444.

2. Identification Table of Parts for Radio Receivers R–274A/FRR, R–274C/FRR, R–320A/FRC, R–483/FRR, and R–483A/FRR—Continued

Ref symbol	Model 1 R–274A/FRR	Model 2 R–274C/FRR	Model 3 R–320A/FRR	Model 4 R–483/FRR	Model 5 R–483A/FRR	Name of part and description	Function of part	Signal Corps stock No.
F1, F2—Con.	(*)	(*)	(*)	(*)	(*)	GEAR ASSEMBLY: 3½″ dia x .383″ thk; Hammarlund part/dwg #K–31098–1.	Drive for main dial	2Z4872–242.
	(*)	(*)				HOLDER, spring: 2$^{5}/_{16}$″ lg x $^{11}/_{16}$″ wd x ¼″ thk; Hammarlund dwg #31415.	Mounts crystal holder retaining springs.	2Z5042–94.
	(*)	(*)	(*)	(*)	(*)	INSULATOR, bushing: round; steatite, grade L4B, white; $^{15}/_{16}$″ lg x .280″ dia; Electrical Industries part #CC–80W–PP.	Feedthrough	3G290–35.
J3	(*)	(*)	(*)	(*)	(*)	JACK, telephone: for 2 cond plug ¼″ dia; 1¼″ lg x 1″ wd x ¾″ h; JAN type JJ–034.	PHONES output	2Z5534.
	(*)	(*)				KNOB: round; black brass; for ¼″ dia shaft; marked w/1 white line; ¾″ dia x ⅞″ thk; GE #31434–G1.	For XTALS selector switch and FREQ control.	2Z5822–583.
	(*)	(*)	(*)	(*)	(*)	KNOB: round; black phenolic; for ¼″ dia shaft; 3″ dia x 1⅛″ thk; GE part #31215.	For TUNING and BAND CHANGE controls.	2Z5822–582.
	(*)	(*)	(*)	(*)	(*)	LAMP LM–52: 6–8 v, .15 amp; miniature bayonet base; 1⅛″ h; GE type #47.	Dial indicators	2Z5952.
M1	(*)	(*)	(*)	(*)	(*)	METER, S units: 250 μa full-scale deflection; db calibration units; 2$^{1}/_{16}$″ body dia x 1$^{6}/_{16}$″ d; Beede Instr #4903.	R-f and a-f levels	3F3318–2.
	(*)	(*)	(*)	(*)	(*)	MOUNTING: 2″ lg x 1⅜″ wd x ⅜″ h; Hammarlund part #31276.	Dial light	2Z6820.360.
	(*)	(*)	(*)	(*)	(*)	NUT, sheet spring: #6–32 screw size; .500″ across flats x .117″ thk; Hammarlund part #6053 1.	For mounting adjustable tuning core.	6L2756–32–8.
T9	(*)	(*)	(*)	(*)	(*)	OSCILLATOR SUBASSEMBLY: 3$^{3}/_{16}$″ lg x 3$^{9}/_{16}$″ wd x 3¼″ h; Hammarlund part/dwg #PL–31409–1.	3.5-mc oscillator.	2Z2798 18.
	(*)	(*)	(*)	(*)	(*)	OSCILLATOR, SUBASSEMBLY: 4″ lg x 2¼″ wd x 1⅜″ d; Hammarlund part/dwg #31106–1.	Tuning assembly for bfo	2Z9644.33.
	(*)	(*)	(*)	(*)	(*)	PLATE, base: 10$^{7}/_{16}$″ lg x 9$^{7}/_{16}$″ wd x ⅛″ thk; Hammarlund part/dwg #31166.	Dial mechanism	2Z7091 526.
	(*)	(*)	(*)	(*)	(*)	PLATE, gear: 1$^{7}/_{8}$″ lg x 1$^{1}/_{2}$″ wd x $^{3}/_{16}$″ thk; Hammarlund part/dwg #31035.	Mounting for turret driving gears.	2Z7091 527.

2. Identification Table of Parts for Radio Receivers R–274A/FRR, R–274C/FRR, R–320A/FRC, R–483/FRR, and R–483A/FRR—Continued

Ref symbol	Model 1 R-274A FRR	2 R-274C FRR	3 R-320A FRR	4 R-483 FRR	5 R-483A FRR	Name of part and description	Function of part	Signal Corps stock No.
T9—Continued					(*)	PLATE, identification: aluminum; 3 5/16″ lg x 1″ wd x .025″ thk; Hammarlund part #31493–1.	For fuses F1 and F2	2Z7090.404.
					(*)	PLATE, identification: aluminum; 1 7/8″ lg x 1 1/4″ wd x .025″ thk; Hammarlund part #31492–1.		2Z7090.403.
	(*)	(*)		(*)	(*)	PLATE, pressure: 6 3/4″ lg x 5/8″ wd x .094″ thk; Hammarlund dwg #31423.	Holds two filter chokes in	2Z7091–528.
	(*)	(*)				PLIERS: spring compression type; 6″ lg o/a; Hammarlund part #T8222.		6R4625–3.
	(*)	(*)	(*)	(*)	(*)	POINTER, indicator: 1 3/64″ lg x 3/16″ wd x 3/16″ h; Hammarlund part/dwg #31199–1.	Band spread and main tuning dials.	2Z7258.107.
	(*)	(*)	(*)	(*)	(*)	POINTER, indicator: 2 37/64″ lg x 3/16″ wd x 3/16″ h; Hammarlund part/dwg #31186–1.	Frequency range	2Z7258.106.
	(*)	(*)	(*)	(*)	(*)	POST, supporting: 2 1/4″ lg x 9/32″ thk; Hammarlund part dwg #31422.	Filter choke strap mounting	2Z7259–121.
	(*)	(*)	(*)	(*)	(*)	POST, supporting: 5 7/8″ lg x 5/16″ thk; Hammarlund part/dwg #31424.	Power transformer strap mounting.	2Z7259–122.
L1	(*)	(*)	(*)	(*)	(*)	RADIO-FREQUENCY TUNER SUBASSEMBLY: for tuning from .54 to 1.35 mc; 2 1/16″ lg x 1 1/4″ wd x 2″ h; Hammarlund part/dwg #31387.	V1 input (band 1)	2Z11154–31.
L8, L15	(*)	(*)	(*)	(*)	(*)	RADIO-FREQUENCY TUNER SUBASSEMBLY: for tuning from .54 to 1.35 mc; 2 1/16″ lg x 1 1/4″ wd x 2″ h; Hammarlund part/dwg #31386.	L8: V1 plate (band 1) L15: V2 plate (band 1)	2Z11154–37.
L25	(*)	(*)	(*)	(*)	(*)	RADIO HIGH-FREQUENCY TUNER SUBASSEMBLY: for tuning from .54 to 1.35 mc; 2 1/16″ lg x 1 1/4″ wd x 2″ h; Hammarlund part/dwg#31385.	V4 feedback (band 1)	2Z11154–25.
L2	(*)	(*)	(*)	(*)	(*)	RADIO HIGH-FREQUENCY TUNER SUBASSEMBLY: for tuning from 1.35 to 3.45 mc; 2 1/16″ lg x 1 1/4″ wd x 2″ h; Hammarlund part/dwg#31390.	V1 input (band 2)	2Z11154–32.

2. Identification Table of Parts for Radio Receivers R–274A/FRR, R–274C/FRR, R–320A/FRC, R–483/FRR, and R–483A/FRR—Continued

Ref symbol	Model 1 R-274A/FRR	2 R-274C/FRR	3 R-320A/FRR	4 R-483/FRR	5 R-483A/FRR	Name of part and description	Function of part	Signal Corps stock No.
L9, L16	(*)	(*)	(*)	(*)	(*)	RADIO-FREQUENCY TUNER SUBASSEMBLY: for tuning from 1.35 to 3.45 mc; 2 1/16" lg x 1 1/4" wd x 2" h; Hammarlund part/dwg #31389.	L9: V1 plate (band 2) L16: V2 plate (band 2).	2Z11154–38.
L26	(*)	(*)	(*)	(*)	(*)	RADIO-FREQUENCY TUNER SUBASSEMBLY: for tuning from 1.35 to 3.45 mc; 2 1/16" lg x 1 1/4" wd x 2" h; Hammarlund part/dwg #31388.	V4 feedback (band 2)	2Z11154–26.
L3	(*)	(*)	(*)	(*)	(*)	RADIO-FREQUENCY TUNER SUBASSEMBLY: for tuning from 3.45 to 7.4 mc; 2 1/16" lg x 1 1/4" wd x 2" h; Hammarlund part/dwg #31393.	V1 input (band 3).	2Z11154–33.
L10, L17	(*)	(*)	(*)	(*)	(*)	RADIO-FREQUENCY TUNER SUBASSEMBLY: for tuning from 3.45 to 7.4 mc; 2 1/16" lg x 1 1/4" wd x 2" h; Hammarlund part/dwg #31392.	L10: V1 plate (band 3) L17: V2 plate (band 3).	2Z11154–39.
L27	(*)	(*)	(*)	(*)	(*)	RADIO-FREQUENCY TUNER SUBASSEMBLY: for tuning from 3.45 to 7.4 mc; 2 1/16" lg x 1 1/3" wd x 2" h; Hammarlund part/dwg #31391.	V4 feedback (band 3)	2Z11154–27.
L4	(*)	(*)	(*)	(*)	(*)	RADIO-FREQUENCY TUNER SUBASSEMBLY: for tuning from 7.4 to 14.8 mc; 2 1/16" lg x 1 1/4" wd x 2" h; Hammarlund part/dwg #31396.	V1 input (band 4)	2Z11154–34.
L11, L18	(*)	(*)	(*)	(*)	(*)	RADIO-FREQUENCY TUNER SUBASSEMBLY: for tuning from 7.4 to 14.8 mc; 2 1/16" lg x 1 1/4" wd x 2" h; Hammarlund part/dwg #31395.	L11: V1 plate (band 4). L18: V2 plate (band 4).	2Z11154–40.
L28	(*)	(*)	(*)	(*)	(*)	RADIO-FREQUENCY TUNER SUBASSEMBLY: for tuning from 7.4 to 14.8 mc; 2 1/16" lg x 1 1/4" wd x 2" h; Hammarlund part/dwg #33194.	V4 feedback (band 4)	2Z11154–28.
L5	(*)	(*)	(*)	(*)	(*)	RADIO-FREQUENCY TUNER SUBASSEMBLY: for tuning from 14.8 to 29.7 mc; 2 1/16" lg x 1 1/4" wd x 2" h; Hammarlund part/dwg #31399.	V1 input (band 5)	2Z11154–35.
L12, L19	(*)	(*)	(*)	(*)	(*)	RADIO-FREQUENCY TUNER SUBASSEMBLY: for tuning from 14.8 to 29.7 mc; 2 1/16" lg x 1 1/4" wd x 2" h; Hammarlund part/dwg #31398.	L12: V1 plate (band 5) L19: V2 plate (band 5).	2Z11154–41.

2. Identification Table of Parts for Radio Receivers R–274A/FRR, R–274C/FRR, R–320A/FRC, R–483/FRR, and R–483A/FRR—Continued

Ref symbol	Model 1 R-274A/FRR	2 R-274C/FRR	3 R-320A/FRR	4 R-483/FRR	5 R-483A/FRR	Name of part and description	Function of part	Signal Corps stock No.
L29	(*)	(*)	(*)	(*)	(*)	RADIO-FREQUENCY TUNER SUBASSEMBLY: for tuning for 14.8 to 29.7 mc; 2 1/16" lg x 1 1/4" wd x 2" h; Hammarlund part/dwg #31397.	V4 feedback (band 5)	2Z11154-29.
L6	(*)	(*)	(*)	(*)	(*)	RADIO-FREQUENCY TUNER SUBASSEMBLY: for tuning from 29.7 to 54.0 mc; 2 1/16" lg x 1 1/4" wd x 2" h; Hammarlund part/dwg #31405.	V1 input (band 6)	2Z11154-26.
L13, L20	(*)	(*)	(*)	(*)	(*)	RADIO-FREQUENCY TUNER SUBASSEMBLY: for tuning from 29.7 to 54.0 mc; 2 1/16" lg x 1 1/4" wd x 2" h; Hammarlund part/dwg #31404.	L13: V1 plate (band 6) L20: V2 plate (band 6).	2Z11154-24.
L30	(*)	(*)	(*)	(*)	(*)	RADIO-FREQUENCY TUNER SUBASSEMBLY: for tuning from 29.7 to 54.0 mc; 2 1/16" lg x 1 1/4" wd x 2" h; Hammarlund part/dwg #31403.	V4 feedback (band 6)	2Z11154-30.
L51	(*)	(*)	(*)	(*)	(*)	REACTOR: 8.5 hy; 150 ma; 150 ohms d-c res; HS metal case; 3 3/4" lg x 3" wd x 3" d; UTC #31030.	B+ filter	3C573-46.
L52	(*)	(*)	(*)	(*)	(*)	REACTOR: 20 hy; 115 ma; 354 ohms d-c res; HS metal case; 3 3/4" lg x 3" wd x 3" d; UTC #31031.	B+ filter	3C573-45.
R42, R50, R55	(*)	(*)	(*)	(*)	(*)	RESISTOR, fixed: comp: 10 ohms ±10%; 1/2 w; JAN type RC20BF100K.	R42: V9 grid parasitic suppressor. R50: V10 grid parasitic suppressor. R55: V11 grid parasitic suppressor.	3RC20BF100K.
R10, R11, R20, R21.	(*)	(*)	(*)	(*)	(*)	RESISTOR, fixed: comp; 22 ohms ±10%; 1/2 w; JAN type RC20BF220K.	R10: V1 plate circuit parasitic suppressor (band 4). R11: V2 grid circuit parasitic suppressor. R20: V2 plate circuit parasitic suppressor (band 4). R21: V5 control grid circuit parasitic suppressor.	3RC20BF220K.
R9, R19	(*)	(*)	(*)	(*)	(*)	RESISTOR, fixed: comp: 24 ohms ±5%; 1/2 w; JAN type RC20BF240J.	R9: V1 output fixed attenuator (band 3). R19: V2 output fixed attenuator (band 3).	3RC20BF240J.

2. Identification Table of Parts for Radio Receivers R–274A/FRR, R–274C/FRR, R–320A/FRC, R–483/FRR, and R–483A/FRR—Continued

Ref symbol	Model 1 R-274A/FRR	Model 2 R-274C/FRR	Model 3 R-320A/FRR	Model 4 R-488/FRR	Model 5 R-483A/FRR	Name of part and description	Function of part	Signal Corps stock No.
R7, R8, R17, R18.	(*)	(*)	(*)	(*)	(*)	RESISTOR, fixed: comp; 51 ohms ±5%; ½ w; JAN type RC20BF510J.	R7: V1 output fixed attenuator (band 1). R8: V1 output fixed attenuator (band 2). R17: V2 output fixed attenuator (band 1). R18: V2 output fixed attenuator (band 2).	3RC20BF510J.
R27	(*)	(*)	(*)	(*)	(*)	RESISTOR, fixed: comp; 150 ohms ±5%; ½ w; JAN type RC20BF151J.	V5 cathode bias	3RC20BF151J.
R24, R25	(*)	(*)	---	---	---	RESISTOR, fixed: comp; 180 ohms ±10%; ½ w; JAN type RC20BF181K.	R24: V3 screen grid circuit decoupling. R25: V3 plate circuit decoupling.	3RC20BF181K.
R45	(*)	(*)	(*)	(*)	(*)	RESISTOR, fixed: comp; 240 ohms ±5%; ½ w; JAN type RC20BF241J.	V9 input selectivity	3RC20BF241J.
R99	(*)	(*)	(*)	(*)	(*)	RESISTOR, fixed: comp; 360 ohms ±5%; 1 w; JAN type RC30BF361J.	V17 cathode bias	3RC30BF361J.
R112		(*)			(*)	RESISTOR, fixed: comp; 390 ohms ±10%; ½ w; JAN type RC20BF391K.	V7 cathode bias	3RC20BF391K.
R5, R15, R32, R103 through R110.	(*) (*)	(*) ---	(*) (*)	(*) (*)	(*) --	RESISTOR, fixed: comp; 510 ohms ±5%; ½ w; JAN type RC20BF511J.	R5: V1 plate voltage dropping R15: V2 plate voltage dropping. R32: V7 grid voltage dividing. R103: V1 plate low-impedance coupling (band 1). R104: V2 plate low-impedance coupling (band 1). R105: V1 plate low-impedance coupling (band 2). R106: V2 plate low-impedance coupling (band 2). R107: V1 plate low-impedance coupling (band 3). R108: V2 plate low-impedance coupling (band 3). R109: V1 plate low-impedance coupling (band 4). R110: V2 plate low-impedance coupling (band 4).	3RC20BF511J.
R79	(*)	(*)	(*)	(*)	(*)	RESISTOR, fixed: comp; 680 ohms ±10%; ½ w; JAN type RC20BF681K.	V16A cathode load	3RC20BF681K.

2. Identification Table of Parts for Radio Receivers R–274A/FRR, R–274C/FRR, R–320A/FRC, R–483/FRR, and R–483A/FRR—Continued

Ref symbol	Model 1 R–274A/FRR	Model 2 R–274C/FRR	Model 3 R–320A/FRR	Model 4 R–483/FRR	Model 5 R–483A/FRR	Name of part and description	Function of part	Signal Corps stock No.
R4, R6, R16, R29, R30, R83, R102, R114 (in serial No. 487 and higher).	(*) (*)	(*) (*)	(*) (*)	(*) (*)	(*)	RESISTOR, fixed: comp; 1000 ohms ±10%; ½ w; JAN type RC20BF102K.	R4: V1 screen grid circuit decoupling. R6: V1 plate circuit decoupling. R16: V2 plate circuit decoupling. R29 and R30: V4 plate circuit decoupling. R83: V16B cathode bias. R102: V14A load. R114: V2 screen grid circuit decoupling.	3RC20BF102K.
R46, R94	(*)	(*)	(*)	(*)	(*)	RESISTOR, fixed, comp: 1100 ohms ±5%; ½ w; JAN type RC20BF112J.	R46: V9 input selectivity. R94: Bias supply voltage divider.	3RC20BF112J.
R33	(*)	(*)	(*)	(*)	(*)	RESISTOR, fixed, comp: 1500 ohms ±10%; ½ w; JAN type RC20BF152K.	V7 input fixed attenuator	3RC20BF152K.
R31, R37, R41, R49, R54, R58, R80.	(*)	(*)	(*)	(*)	(*)	RESISTOR, fixed, comp: 2200 ohms ±10%; ½ w; JAN type RC20BF222K.	R31: V5 plate circuit decoupling. R37: V6 screen grid and V8 plate circuits decoupling. R41: V6 plate circuit decoupling. R49: V9 plate circuit decoupling. R54: V10 plate circuit decoupling. R58: V11 screen grid voltage dropping. R80: V16A plate voltage dropping.	3RC20BF222K.
R59	(*)	(*)	(*)	(*)	(*)	RESISTOR, fixed, comp: 2200 ohms ±10%; 1 w; JAN type RC30BF222K	V11 plate circuit decoupling.	3RC30BF222K.
R85	(*)	(*)	(*)	(*)	(*)	RESISTOR, fixed, WW: 2500 ohms ±5%; 12 w; JAN type RW32G252.	V18 current limiting	3RW26707
R3 and R14 (in serial No. 487 through 1569).		(*)				RESISTOR, fixed, comp: 3300 ohms ±5%; ½ w; JAN type RC20BF332J.	R3: V1 screen grid voltage dropping. R14: V2 screen grid voltage dropping.	3RC20BF332J.
R28	(*)	(*)	(*)	(*)	(*)	RESISTOR, fixed, comp: 6800 ohms ±10%; ½ w; JAN type RC20BF682K.	V5 screen grid voltage dropping.	3RC20BF682K.
R72 (in R–274C/FRR serial No. 487 and higher).		(*)				RESISTOR, fixed, WW: 7500 ohms ±10%; 20 w; Model Eng and Mfg Co. type FR–20.	Part of B+ bleeder	3Z6575–112.

2. Identification Table of Parts for Radio Receivers R–274A/FRR, R–274C/FRR, R–320A/FRC, R–483/FRR, and R–483A/FRR—Continued

Ref symbol	Model 1 R-274A/FRR	2 R-274C/FRR	3 R-320A/FRR	4 R-483/FRR	5 R-483A/FRR	Name of part and description	Function of part	Signal Corps stock No.
R2, R12, R44, R52, R57, R70, R82, R90, R91, R92.	(*)	(*)	(*)	(*)	(*)	RESISTOR, fixed, comp: 10,000 ohms ±5%; ½ w; JAN type RC20BF103J.	R2: V1 grid circuit decoupling. R12: V2 grid circuit decoupling. R44: V9 grid circuit decoupling. R52: V10 grid circuit decoupling. R57: V11 grid circuit decoupling. R70: Output meter multiplier. R82: V16B plate circuit decoupling. R90, R91, and R92: Bias supply filters.	3RC20BF103J.
R73 (in R–274C/FRR Serial No. 487 and higher).	---	(*)	---	---	---	RESISTOR, fixed, WW: 10,000 ohms; ±10%; 20 w; Model Eng and Mfg Co. type FR–20.	Part of B+ bleeder	3Z6610–368.
R47, R66	(*)	(*)	(*)	(*)	(*)	RESISTOR, fixed, comp: 18,000 ohms ±10%; ½ w; JAN type RC20BF183K.	R47: V9 input selectivity R66: V14B Cathode delayed ave voltage divider.	3RC20BF183K.
R72 (in R–274C/FRR serial No. 1 through 486).	(*)	(*)	(*)	(*)	(*)	RESISTOR, fixed, comp: 20,000 ohms ±5%; ½ w; JAN type RC20BF203J.	B+ bleeder network	3RC20BF203J.
R40	(*)	(*)	(*)	(*)	(*)	RESISTOR, fixed, comp: 20,000 ohms ±5%; 1 w; JAN type RC30BF203J.	V6 screen grid voltage dropping.	3RC30BF203J.
R36, R96, R65	(*) --- ---	(*) (*) ---	(*) --- ---	(*) --- ---	(*) (*) ---	RESISTOR, fixed, comp: 22,000 ohms ±5%; ½ w; JAN type RC20BF223J.	R36: V8 grid leak and V6 grid (pin 1) d-c return. R96: Bias supply voltage divider. R65: Part of V14A load.	3RC20BF223J.
R63, R103 through R110.	(*) --- ---	(*) (*) ---	(*) --- ---	(*) --- ---	(*) (*) ---	RESISTOR, fixed, comp: 27,000 ohms ±10%; ½ w; JAN type RC20BF273K.	R63: Part of V14A load. R103: V1 plate low-impedance coupling (band 1). R104: V2 plate low-impedance coupling (band 1). R105: V1 plate low-impedance coupling (band 2). R106: V2 plate low-impedance coupling (band 2). R107: V1 plate low-impedance coupling (band 3).	3RC20BF273K.

2. Identification Table of Parts for Radio Receivers R–274A/FRR, R–274C/FRR, R–320A/FRC, R–483/FRR, and R–483A/FRR—Continued

Ref symbol	Model 1 R–274A/FRR	Model 2 R–274C/FRR	Model 3 R–320A/FRR	Model 4 R–483/FRR	Model 5 R–483A/FRR	Name of part and description	Function of part	Signal Corps stock No.
R63, R103 through R110—Con.						RESISTOR, etc.—Con.	R108: V2 plate low-impedance coupling (band 3). R109: V1 plate low-impedance coupling (band 4). R110: V2 plate low-impedance coupling (band 4).	
R3, R14 (in R–274C/FRR serial No. 1 through 486 and 1570 and higher), R39, R48, R53 (in R–274C/FRR serial No. 1 through 1569).	(*)	(*)	(*)	(*)	(*)	RESISTOR, fixed, comp: 33,000 ohms ±5%; ½ w; JAN type RC20BF333J.	R3: V1 screen grid voltage dropping. R14: V2 screen grid voltage dropping. R39: V7 screen grid voltage dropping. R48: V9 screen grid voltage dropping. R53: V10 screen grid voltage dropping.	3RC20BF333J.
R22, R64, R77, R65, R23.	(*) (*) (*)	(*) (*)	(*) (*)	(*) (*)	(*) (*)	RESISTOR, fixed, comp: 47,000 ohms ±10%; ½ w; JAN type RC20BF473K.	R22: V4 grid leak R64 and R65: Parts of V14A loads. R77: V13 plate circuit decoupling. R23: V3 grid lead.	3RC20BF473K.
R73 (in R–274C/FRR serial No. 1 through 486).	(*)	(*)	(*)	(*)	(*)	RESISTOR, fixed, comp: 56,000 ohms ±5%; 1 w; JAN type RC30BF563J.	B+ bleeder network	3RC30BF563J.
R86, R89, R95	(*)	(*)	(*)	(*)	(*)	RESISTOR, fixed, comp: 82,000 ohms ±5%; ½ w; JAN type RC20BF823J.	R86 and R89: V20 cathode voltage dropping. R95: Bias supply voltage divider.	3RC20BF823J.
R35, R38, R43, R51, R56, R62, R67, R68, R75, R76, R81, R100, R34, R111.	(*) (*)	(*) (*)	(*) (*)	(*) (*)	(*) (*)	RESISTOR, fixed, comp: 100,000 ohms ±10%; ½ w; JAN type RC20BF104K.	R35: V6 control grid circuit decoupling. R38: V8 plate circuit decoupling. R43: V9 grid d-c return. R51: V10 grid d-c return. R56: V11 grid d-c return. R62: Part of V14A load. R67: V15A noise filter network. R68: V14B cathode delayed ave voltage divider. R75: V13 grid d-c return R76: V13 plate voltage dropping. R81: V16B plate voltage dropping.	3RC20BF104K.

2. Identification Table of Parts for Radio Receivers R–274A/FRR, R–274C/FRR, R–320A/FRC, R–483/FRR, and R–483A/FRR—Continued

Ref symbol	Model 1 R-274A/FRR	2 R-274C/FRR	3 R-320A/FRR	4 R-483/FRR	5 R-483A/FRR	Name of part and description	Function of part	Signal Corps stock No.
R35, etc.—Con.	(*)				(*)	RESISTOR, etc.—Continued	R100: V12 screen voltage dropping. R34: V7 grid circuit decoupling. R111: Avc line filter.	
R87, R88	(*)	(*)	(*)	(*)	(*)	RESISTOR, fixed, comp: 120,000 ohms ±5%; ½ w; JAN type RC20BF124J.	R87 and R88: V20 cathode voltage dividers.	3RC20BF124J.
R113		(*)	(*)		(*)	RESISTOR, fixed, comp: 330,000 ohms ±5%; ½ w; RC20BF334K.	R113: V11 grid voltage divider.	3RC20BF334K.
R78, R98	(*)	(*)	(*)	(*)	(*)	RESISTOR, fixed, comp: 470,000 ohms ±10%; ½ w; JAN type RC20BF474K.	V78: V16A grid d-c return R98: V17 grid d-c return.	3RC20BF474K.
R1, R13, R26	(*)	(*)	(*)	(*)	(*)	RESISTOR, fixed, comp: 510,000 ohms ±5%; ¼ w; JAN type RC10BF514J.	R1: V1 grid d-c return R13: V2 grid d-c return. R26: V5 control grid d-c return.	3RC10BF514J.
R60, R61	(*)	(*)	(*)	(*)	(*)	RESITOR, fixed, comp: 1 meg ±10%; ½ w; JAN type RC20BF105K.	R60: Avc line filter R61: Avc load.	3RC20BF105K.
R115, R116 (in serial Nos. 1570 and higher).		(*)			(*)	RESISTOR, fixed, comp: 1.5 meg ±10%; ½ w; JAN type RC20BF155K.	Avc voltage divider circuit	3RC20BF155K.
R97	(*)	(*)	(*)	(*)	(*)	RESISTOR, fixed, comp: 3.3 meg ±10%; ½ w; JAN type RC20BF335K.	Avc isolation	3RC20BF335K.
R69, R74	(*) (*)		(*) (*)	(*) (*)		RESITOR, variable: WW; 1000 ohms ±10%; 2 w; JAN type RA20A1SA102AK.	R69: METER ADJ RF R74: BFO INJ.	3RA5710.
R69		(*)			(*)	RESISTOR, variable: WW; 3300 ohms ±10%; 1 w; Hammarlund part/dwg #15366–1.	METER ADJ RF	3Z7330–10.
R211			(*)			RESISTOR, variable: comp; 5000 ohms ±20%; JAN type RV2ANFK502A.	IF GAIN	3RV35017.
R101	(*)	(*)	(*)	(*)	(*)	RESISTOR, variable: comp; 25,000 ohms ±10%; 2 w; JAN type RV4ANSA253A.	METER ADJ AF	3RV42521.
R93	(*)	(*)	(*)	(*)	(*)	RESISTOR, variable: comp; 50,000 ohms ±10%; 2 w; JAN type RV4BNFK503A.	RF GAIN control and power OFF switch.	3RV45045.
R84	(*)	(*)	(*)	(*)	(*)	RESISTOR, variable: comp; 500,000 ohms ±10%; 2 w; JAN type RV4ANFK504A.	AUDIO GAIN control	3RV55057.
	(*)	(*)	(*)	(*)	(*)	RETAINER, electron tube: approx 1⅞" dia x ¾" h; designed to retain tubes w/ 1.375" dia base; Birtcher type #926C–13.	Tube retainer	2Z2642.79.

2. Identification Table of Parts for Radio Receivers R–274A/FRR, R–274C/FRR, R–320A/FRC, R–483/FRR, and R–483A/FRR—Continued

Ref symbol	Model 1 R–274A/FRR	2 R–274C/FRR	3 R–320A/FRR	4 R–483/FRR	5 R–483A/FRR	Name of part and description	Function of part	Signal Corps stock No.
R84—Continued	(*)	(*)				RETAINER, electron tube: 1⅝″ lg x 1¼″ dia x ¾″ h; designed to retain tubes w/1¼″ dia base; Birtcher part #926B–16.	Tube retainer	2Z2642.80.
	(*)	(*)				RETAINER, electron tube: 3″ dia x 17/32″ h; designed to retain tubes w/1⅜″ dia base; Birtcher part #926B–31.	Tube retainer	2Z2643.103.
	(*)	(*)	(*)	(*)	(*)	ROLLER, cam: ⅞″ dia x 7/32″ thk; Hammarlund part/dwg #31174.	Band changing cam detent roller.	2Z8063–28.
	(*)	(*)	(*)	(*)	(*)	SHIELD, electron tube: bayonet type mtg; .810″ ID x 1.375″ h; JAN type TS102U01.	For V14, V15, and V20	2Z8304.57.
	(*)	(*)	(*)	(*)	(*)	SHIELD, electron tube: bayonet type mtg; .810″ ID x 1¾″ lg; JAN type TS102U02.	For V1, V2, V4 through V13.	2Z8304.276.
			(*)	(*)	(*)	SHIELD, electron tube: brass, nickel pl; cylindrical; 1¾″ lg x 55/64″ dia; Hammarlund part #31449–1.	Tube shield	2Z8304.288.
	(*)	(*)	(*)	(*)	(*)	SHIELD, electron tube: bayonet type mtg; .810″ ID x 2.25″ h; JAN type TS102U03.	Tube shield	2Z8304.277.
X21	(*)					SOCKET, crystal: accom 2 pins ⅛″ dia x ¾″ c to c; 1 5/16″ lg x 7/16″ wd x 15/32″ d; Millen part #33102.	For type Crystal Unit CR–18/U crystal.	2Z8761–48.
X1, X2, X6 through X15, X18, X20.	(*)	(*)	(*)	(*)	(*)	SOCKET, electron tube: 7 cont miniature, 1 piece saddle mtg; JAN type TS102P01.	X1: For V1. X2: For V2. X6 through X15: For V6 through V15, respectively. V18: For V18. X20: For V20.	2Z8677.94.
X4, X5			(*)			SOCKET, electron tube: 7 cont miniature, 1 piece saddle mtg; JAN type TS102C01.	X4: For V4 X5: For V5.	2Z8677.99.
	(*)	(*)	(*)	(*)	(*)			
X3, X17, X19	(*)	(*)				SOCKET, electron tube: octal; 1 piece saddle mtg; JAN type TS101P01.	X3: For V3. X17: For V17. X19: For V19.	2Z8678.326.
			(*)					
X16	(*)	(*)	(*)	(*)	(*)	SOCKET, electron tube: oval; 1 piece saddle mtg; JAN type TS103P01.	For V16.	2Z8679.30.
X17, X19	(*)	(*)		(*)	(*)	SOCKET, electron tube: octal; 1 piece saddle mtg; JAN type TS8T101.	X17: For V17 X19: For V19.	2Z8678.157.

2. Identification Table of Parts for Radio Receivers R–274A/FRR, R–274C/FRR, R–320A/FRC, R–483/FRR, and R–483A/FRR—Continued

Ref symbol	Model 1 R-274A/FRR	2 R-274C/FRR	3 R-320A/FRR	4 R-483/FRR	5 R-483A/FRR	Name of part and description	Function of part	Signal Corps stock No.
X4	(*)	(*)		(*)	(*)	SOCKET, electron tube: 7 cont miniature; 1 piece saddle mtg; Eby Mfg Co #102M.	For V4	2Z8678.330.
	(*)	(*)				SPRING: flat type; .937" lg x .218" wd x .025" thk; Hammarlund part/dwg #31003–1.	Retainer for r-f tuner assembly.	2Z7780–209.
	(*)	(*)				SPRING: flat type; .350" lg x .281" wd x .012" thk; Hammarlund part/dwg #31004–1.	Retainer for r-f coil	2Z7780.210.
	(*)	(*)	(*)	(*)	(*)	SPRING: flat type; 1⅝" lg x 1$\frac{5}{16}$" wd x .025" thk; Hammarlund part/dwg #31278.	Turret rotor shaft	2Z8877.619.
	(*)	(*)	(*)	(*)	(*)	SPRING: flat type; 1$\frac{7}{16}$" lg x $\frac{5}{16}$" wd x .010" thk; Hammarlund part/dwg #31279–1.	Turret rotor shaft	2Z8877.617.
	(*)	(*)				SPRING: flat type; $\frac{25}{32}$" lg x $\frac{3}{16}$" wd x .010" thk; Hammarlund part/dwg #31417.	Crystal holding	2Z8877.618.
	(*)	(*)	(*)	(*)	(*)	SPRING: helical compression type; 1$\frac{13}{32}$" lg x $\frac{3}{16}$" OD; approx 46½ turns; Hammarlund part/dwg #31125–1.	Conversion switch	2Z8877. 695.
	(*)	(*)				SPRING: helical compression type; 2$\frac{11}{16}$" lg x $\frac{5}{32}$" OD; approx 145 turns; Hammarlund part/dwg #31126–1.	Indicator slide	2Z8877. 806.
	(*)	(*)	(*)	(*)	(*)	SPRING: helical compression type; 1½" lg x .307" OD; approx 25¾ turns; Hammarlund part/dwg #31205–1.		2Z8877.694.
	(*)	(*)	(*)	(*)	(*)	SPRING: loop type; 1$\frac{1}{32}$" lg x $\frac{21}{32}$" wd; Hammarlund part/dwg #31239–1.	For antibacklash in gear-train mechanism.	2Z8877.693.
S3	(*)	(*)				SWITCH, rotary: SPST; $\frac{19}{32}$" lg x 1¼" wd x 1$\frac{5}{16}$" h; Oak type F.	H–f oscillator on-off switch (ganged to XTALS-VFO switch).	3Z9825–62.618.
S4	(*)	(*)	(*)	(*)	(*)	SWITCH, rotary: 1 pole 3 throws; ¼" lg x $\frac{27}{32}$" wd x 1$\frac{19}{64}$" h; Oak part #15862.	Conversion switch (ganged to BAND CHANGE switch).	3Z9825 62.620.
S5A, S5B, S5C	(*)	(*)	(*)	(*)	(*)	SWITCH, rotary: 3 sects.; 8$\frac{3}{64}$" lg x 1½" wd x 1$\frac{29}{32}$" h; Oak type H.	SELECTIVITY	3Z9825–62.619.
S1A, S1B, S1C, S1D.	(*)	(*)	(*)	(*)	(*)	SWITCH, subassembly: 6 spring con; 2$\frac{5}{16}$" lg x 1$\frac{21}{32}$" wd x ¼" thk; Hammarlund #31234.	BAND CHANGE	3Z9908–1.1.
S7	(*)	(*)	(*)	(*)	(*)	SWITCH, toggle: DPST; JAN type ST22K.	MOD-CW	3Z9863–22K.

2. Identification Table of Parts for Radio Receivers R–274A/FRR, R–274C/FRR, R–320A/FRC, R–483/FRR, and R–483A/FRR—Continued

Ref symbol	Model 1 R-274A/FRR	2 R-274C/FRR	3 R-320A/FRR	4 R-483/FRR	5 R-483A/FRR	Name of part and description	Function of part	Signal Corps stock No.
S8, S11	(*)	(*)	(*)	(*)	(*)	SWITCH, toggle: DPDT; JAN type ST22N.	S8: AVC-MAN. S11: METER RF–AF.	3Z9863–22H.
S11	(*)	(*)	(*)	(*)	(*)	SWITCH, toggle: DPDT; 5/8" lg x 5/8" wd x 1 1/8" h; AH&H #81057N.	METER RF–AF.	3Z9858–8.222.
S6, S9	(*)	(*)	(*)	(*)	(*)	SWITCH, toggle: SPST; JAN type ST10A.	S6: LIMITER-OFF. S9: SEND-REC.	3Z9863–10A.
E5, E9, E10, E8, E11, E12, E4, E6.	(*)	(*)	(*)	(*)	(*)	TERMINAL BOARD: 1 solder lug term.; 3/4" lg x 23/32" h x 1/16" thk; Cinch part #516.	Mounting supports	3Z770–1.24.
E7	(*)	(*)				TERMINAL BOARD: 2 solder lug term.; 1 1/8" lg x 1 1/16" h x 33/64" thk; Cinch part #1520.	Mounting support for L21, L22, and R25.	3Z770–2.5.
E1	(*)	(*)	(*)	(*)		TERMINAL BOARD: 2 solder lug term.; 2" lg x 7/8" thk; Jones HB part #2050.	PHONO input.	2Z9463.1.
E18	(*)	(*)	(*)	(*)	(*)	TERMINAL BOARD: 3 solder lug term.; 3 1/4" lg x 1 13/16" wd x 1/16" thk; TJ Long part #31454–G1.	For meter connections.	3Z770–3.63.
E2	(*)	(*)	(*)	(*)	(*)	TERMINAL BOARD: 4 screw term.; 3 1/4" lg x 1 1/8" wd x 1/8" thk; Jones HB per Hammarlund part #31141.	AUDIO OUTPUT.	3Z770–4.121.
E3			(*)		(*)	TERMINAL BOARD: 4 screw term.; 3 1/4" lg x 7/8" wd x 1/8" thk; Hammarlund part/dwg #31480.	DIODE OUTPUT and AVC.	3Z770–4.129.
E13, E14	(*)	(*)	(*)	(*)	(*)	TERMINAL BOARD: 6 solder lug term.; 3" lg x 1 1/16" wd x 1/16" thk; Cinch part #56A.	Cable connections and mounting supports.	3Z770–6.106.
E15, E16	(*)	(*)	(*)	(*)	(*)	TERMINAL BOARD: 8 solder lug term.; 3 1/16" thk; TJ Long part #31163–G1.	Mounting supports	3Z770–8.93.
E17	(*)	(*)	(*)	(*)	(*)	TERMINAL BOARD: 15 solder lug term.; 7 1/16" lg x 1 1/16" wd x 1/16" thk; TJ Long part #31162–G1.	Mounting support	3Z770–15.23.
						THUMBSCREW: knurled head; brass; cad pl; 1" lg x 3/16" dia w/1/2" dia head; Hammarlund #31495.		6L17008–16.8K1.
T7	(*)	(*)	(*)	(*)	(*)	TRANSFORMER, AF: plate coupling type; pri 10,000 ohms at 40 ma, secd 8,000 ohms tapped at 600 ohms, 60 ma; 2 7/8" h x 2 3/16" dia; UTC #31085–2.	Audio output.	2Z9632.650.

2. Identification Table of Parts for Radio Receivers R–274A/FRR, R–274C/FRR, R–320A/FRC, R–483/FRR, and R–483A/FRR—Continued

Ref symbol	Model 1 R-274A/FRR	Model 2 R-274C/FRR	Model 3 R-320A/FRR	Model 4 R-483/FRR	Model 5 R-483A/FRR	Name of part and description	Function of part	Signal Corps stock No.
T1	(*)	(*)	(*)	(*)	(*)	TRANSFORMER, IF: 455 and 3955 kc; incl L31, L32, C67, C69, C70, and R31; 2″ lg x 2½″ wd x 1⅛″ d; Hammarlund part/dwg #31183.	V5 output	2Z9641.329.
L53	(*)	(*)	(*)	(*)	(*)	TRANSFORMER, IF: 455 kc; 2¼″ lg x 37/64″ dia; Jeffers Electronics Corp part/dwg #1369.	V16B i-f output	2Z9642.146.
T2	(*)	(*)	(*)	(*)	(*)	TRANSFORMER, IF: 3,955 kc incl L33, L34, C97, C98, C99, and R35; 4″ lg x 2½″ wd x 1 15/16″ h; Hammarlund part/dwg #31116.	V6 input	2Z9641.330.
T3	(*)	(*)	(*)	(*)	(*)	TRANSFORMER, IF: 455 kc; incl L36, L37, C107, C110, C111, C112, C113, C114, R41, and Y8; 4″ lg x 2½″ wd x 2 15/16″ h; Hammarlund part/dwg #3114.	Crystal filter	2Z9641.331.
T4, T5	(*)	(*)	(*)	(*)	(*)	TRANSFORMER, IF: 455 kc; interstage; 4″ lg x 2½″ wd x 1 15/16″ d; Hammarlund part/dwg #31102 G2.	T4: V9 output T5: V10 output.	2Z9641.332.
T8	(*)	(*)	(*)	---	---	TRANSFORMER, power: step-up and step-down; 1 input wnd 95/105/117/130/190/210/234/260 v ac, 50/60 cyc, single ph; 5 output wnd, #1 secd 5 v at 3 amp, #2 secd 610 v at 150 ma, #3 secd 6.3 v at 5 amp, #4 secd 7.5 v at 2 amp, #5 secd 7.5 v at 2 amp, #6 secd CT; HS metal case: 5½″ h x 4½″ dia; Hammarlund part/dwg #31029–2.	Power input	2Z9621–216.
	---	---	---	(*)	(*)	25/60 cyc; Hammarlund part/dwg #31029–3.	---	2Z9613.767.
P/O L25	(*)	(*)	(*)	(*)	(*)	TRANSFORMER, RF: .54–1.35 mc freq range; osc; unshielded; 1 7/16″ lg x 19/32″ dia: Hammarlund part/dwg #31422.	V4 feedback (Band 1)	2Z9629–383.
P/O L8, L15	(*)	(*)	(*)	(*)	(*)	TRANSFORMER, RF: .54–1.35 mc freq range; r-f grid; unshielded; 1 7/16″ lg x 19/32″ dia; Hammarlund part/dwg #31246.	L8: V1 plate coupling (band 1). L15: V2 plate coupling (band 1).	2Z9629–381.

2. Identification Table of Parts for Radio Receivers R–274A/FRR, R–274C/FRR, R–320A/FRC, R–483/FRR, and R–483A/FRR—Continued

Ref symbol	Model 1 R 274A FRR	Model 2 R 274C FRR	Model 3 R 320A FRR	Model 4 R 483 FRR	Model 5 R 483A FRR	Name of part and description	Function of part	Signal Corps stock No.
P/O L1	(*)	(*)	(*)	(*)	(*)	TRANSFORMER, RF: .54–1.35 mc freq range; r-f input; unshielded; 1 7/16" lg x 19/32" dia; Hammarlund part/dwg #31445.	V1 input (band 1)	2Z9629–382.
P/O L26	(*)	(*)	(*)	(*)	(*)	TRANSFORMER, RF: 1.35–3.45 mc freq range; osc; unshielded; 1 7/16" lg x 9/16" dia; Hammarlund part/dwg #31248.	V4 feedback (band 2)	2Z9629–380.
P/O L9, L16	(*)	(*)	(*)	(*)	(*)	TRANSFORMER, RF: 1.35–3.45 mc freq range; unshielded; r-f grid; 1 7/16" lg x 9/16" dia; Hammarlund part/dwg #31250.	L9: V1 plate coupling (band 2). L16: V2 plate coupling (band 2).	2Z9629–370.
P/O L2	(*)	(*)	(*)	(*)	(*)	TRANSFORMER, RF: 1.35–3.45 mc freq range; r-f input; unshielded; 1 7/16" lg x 9/16" dia; Hammarlund part/dwg #31249.	V1 input (band 2)	2Z9629–379.
P/O L27	(*)	(*)	(*)	(*)	(*)	TRANSFORMER, RF: 3.45–7.4 mc freq range; osc; unshielded; 1 7/16" lg x 1/2" dia; Hammarlund part/dwg #31251.	V4 feedback (band 3)	2Z9629–371.
P/O L10, L17	(*)	(*)	(*)	(*)	(*)	TRANSFORMER, RF: 3.45–7.4 mc freq range; r-f grid; unshielded; 1 7/16" lg x 1/2" dia; Hammarlund part/dwg #31253.	L10: V1 plate coupling (band 3). L17: V2 plate coupling (band 3).	2Z9629–373.
P/O L3	(*)	(*)	(*)	(*)	(*)	TRANSFORMER, RF: 3.45–7.4 mc freq range; r-f input; unshielded; 1 7/16" lg x 1/2" dia; Hammarlund part/dwg #31252.	V1 input (band 3)	2Z9629–372.
P/O L11, L18	(*)	(*)	(*)	(*)	(*)	TRANSFORMER, RF: 7.4–14.8 mc freq range; r-f grid; unshielded; 1 7/16" lg x 1/2" dia; Hammarlund part/dwg #31256.	L11: V1 plate coupling (band 4). L18: V2 plate coupling (band 4).	2Z9629–375.
P/O L4	(*)	(*)	(*)	(*)	(*)	TRANSFORMER, RF: 7.4–14.8 mc freq range; r-f input; unshielded; 1 7/16" lg x 1/2" dia; Hammarlund part/dwg #31255.	V1 input (band 4)	2Z9629–374.
P/O L12, L19	(*)	(*)	(*)	(*)	(*)	TRANSFORMER, RF: 14.8–29.7 mc freq range; unshielded; 1 7/16" lg x 1/2" dia; Hammarlund part/dwg #31259.	L12: V1 plate coupling (band 5).	2Z9629–377.

2. Identification Table of Parts for Radio Receivers R–274A/FRR, R–274C/FRR, R–320A/FRC, R–483/FRR, and R–483A/FRR—Continued

Ref symbol	Model 1 R-274A/FRR	Model 2 R-274C/FRR	Model 3 R-320A/FRR	Model 4 R-483/FRR	Model 5 R-483A/FRR	Name of part and description	Function of part	Signal Corps stock No.
P/O L5	(*)	(*)	(*)	(*)	(*)	TRANSFORMER, RF: 14.8–29.7 mc freq range; unshielded; 1 7/16" lg x 1/2" dia; Hammarlund part/dwg #31258.	V1 input (band 5)	2Z9629–376.
P/O L3, L20	(*)	(*)	(*)	(*)	(*)	TRANSFORMER, RF: 29.7–54.0 mc freq range; unshielded; 1 7/16" lg x 1/2" dia; Hammarlund part/dwg #31262.	L13: V1 plate coupling (band 6). L20: V2 plate coupling (band 6).	2Z9629–384.
P/O L6	(*)	(*)	(*)	(*)	(*)	TRANSFORMER, RF: 29.7–54.0 mc freq range; r-f input; unshielded; 1 7/16" lg x 1/2" dia; Hammarlund part/dwg #31261.	V1 input (band 6)	2Z9629–378.
T6	(*)	(*)	(*)	(*)	(*)	TRANSFORMER SUBASSEMBLY: 4" lg x 1 7/8" wd x 1 15/32" d; Hammarlund #31106.	Bfo	2Z9629–371.
	(*)	(*)	(*)	(*)	(*)	WINDOW: dial; 3 3/8" dia x 3/32" thk; Hammarlund part/dwg #31281.	TUNING dial	6Z9463–7.
	(*)	(*)	(*)	(*)	(*)	WINDOW: freq range dia; 3" lg x 11/16" wd x 3/32" thk; Hammarlund part/dwg #31282.	BAND CHANGE dial	6Z9463–8.

RESISTOR COLOR AND LETTER CODE

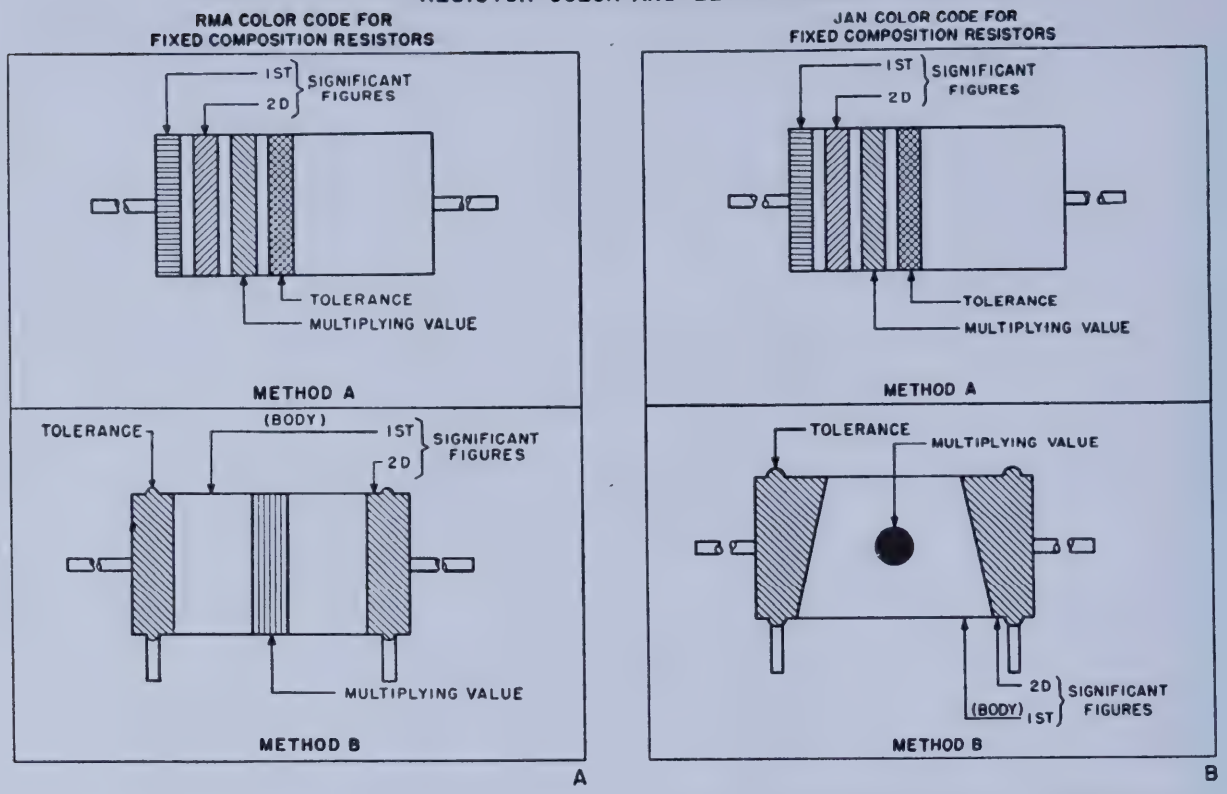

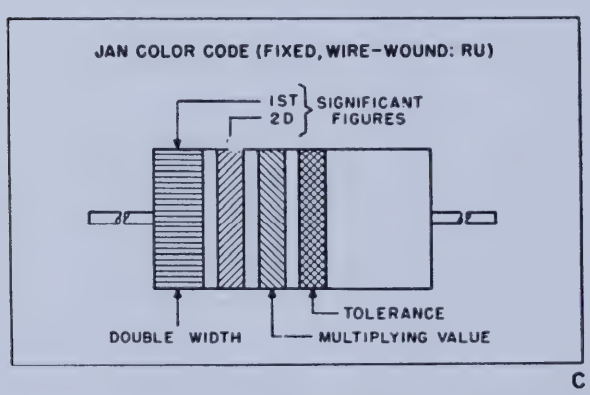

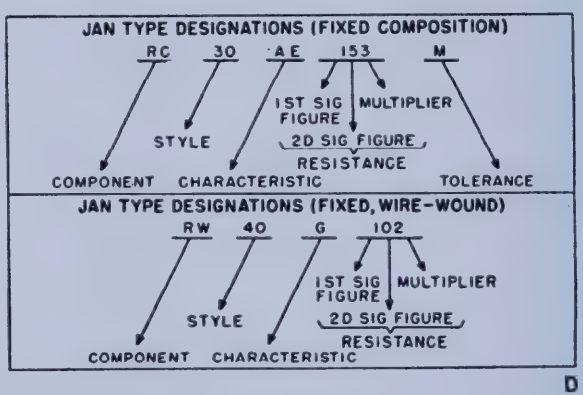

STANDARDS				
COLOR	SIGNIFICANT FIGURE	MULTIPLYING VALUE	TOLERANCE (%)	JAN LETTER TOLERANCE
BLACK	0	1	–	–
BROWN	1	10	± 1	F
RED	2	100	± 2	G
ORANGE	3	1,000	± 3	–
YELLOW	4	10,000	± 4	–
GREEN	5	100,000	± 5	–
BLUE	6	1,000,000	± 6	–
VIOLET	7	10,000,000	± 7	–
GRAY	8	100,000,000	± 8	–
WHITE	9	1,000,000,000	± 9	–
GOLD	–	0.1	± 5	J
SILVER	–	0.01	±10	K
NO COLOR	–	–	±20	M

NOTES:

1. RESISTORS WITH AXIAL LEADS ARE INSULATED. RESISTORS WITH RADIAL LEADS ARE NON-INSULATED.
2. RMA: RADIO MANUFACTURERS ASSOCIATION.
3. JAN: JOINT ARMY-NAVY.
4. THESE COLOR AND NUMBER CODES GIVE ALL RESISTANCE VALUES IN OHMS.
5. RESISTIVE COMPONENTS USED FOR LETTER TOLERANCES ARE: RC, RN, AND RU.
6. WATTAGE FOR RW TYPES IS FOUND IN THE JAN SPECIFICATIONS UNDER CHARACTERISTICS.

TM RC

Figure 95. Resistor color codes.

CAPACITOR COLOR AND LETTER CODES

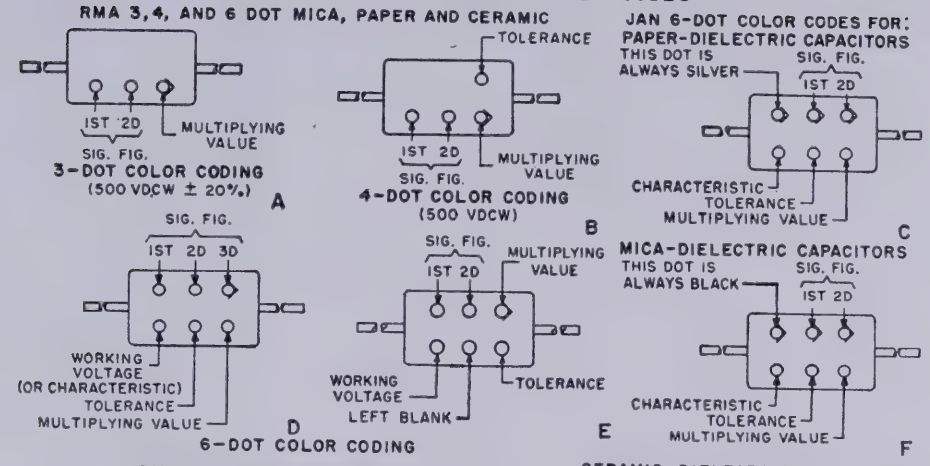

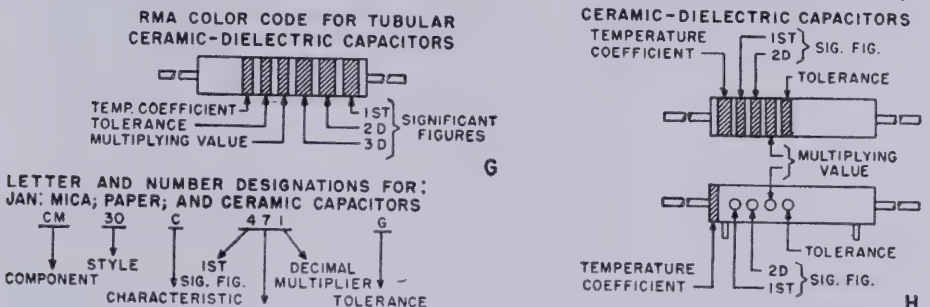

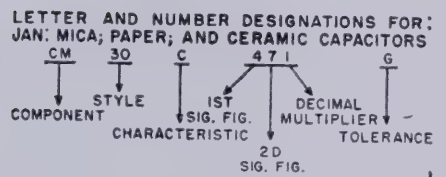

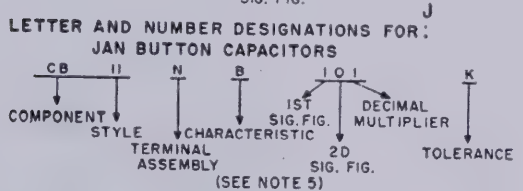

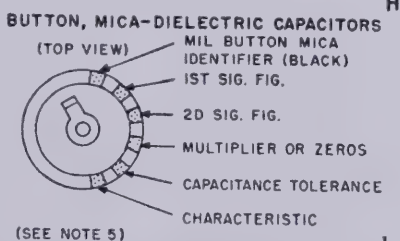

- STANDARDS -					JAN MICA-CM		JAN PAPER-CM		JAN CERAMIC-CC					
										CAP. TOL. FOR MORE THAN 10 UUF		CAP. TOL. FOR 10 UUF OR LESS		
COLOR	SIG. FIG.	DECIMAL MULTIPLIER	% TOL.	VDCW	LETTER TOL.	CHARAC-TERISTIC	LETTER TOL.	CHARAC-TERISTIC	DEC. MULT.	%	LETTER DESIG-NATION	UUF	LETTER DESIG-NATION	CHARAC-TERISTIC
BLACK	0	1	±20	500	M	A	M	A	1	±20	M	±2.0	G	C
BROWN	1	10	± 1	100	-	B	-	E	10	± 1	F	-	-	H
RED	2	100	± 2	200	G	C	-	H	100	± 2	G	-	-	L
ORANGE	3	1,000	± 3	300	-	D	N*	J	1,000	-	-	-	-	P
YELLOW	4	10,000	± 4	400	-	E	-	P	-	-	-	-	-	R
GREEN	5	100,000	± 5	500	-	F	-	R	-	± 5	J	±0.5	D	S
BLUE	6	1,000,000	± 6	600	-	G	-	S	-	-	-	-	-	T
VIOLET	7	10,000,000	± 7	700	-	-	-	T	-	-	-	-	-	U
GRAY	8	100,000,000	± 8	800	-	-	-	-	0.01	-	-	±0.25	C	B
WHITE	9	1,000,000,000	± 9	900	-	-	-	-	0.1	± 10	K	±1.0	F	SL
GOLD	-	0.1	± 5	1,000	J	-	-	-	-	-	-	-	-	A
SILVER	-	0.01	±10	2,000	K	-	K	-	-	-	-	-	-	-
NO COLOR	-	-	±20	500	-	-	-	-	-	-	-	-	-	-
* THE TOLERANCE OF THIS CAPACITOR IS ±30%, NOT ±3%														

NOTES

JAN: JOINT ARMY-NAVY
RMA: RADIO MANUFACTURERS ASSOCIATION

1. THESE COLOR AND LETTER CODES GIVE CAPACITANCES IN MICROMICROFARADS
2. THIS TABLE IS ADAPTED FOR JAN AND RMA COLOR AND JAN LETTER TYPE DESIGNATIONS
3. CERAMIC AND MICA CAPACITORS, BOTH JAN AND RMA, ARE GENERALLY 500 VDCW
4. BUTTON CAPACITORS ARE GENERALLY 300 VDCW
5. READ BUTTON CAPACITOR TOLERANCE UNDER CERAMICS OF MORE THAN 10 UUF
6. CHARACTERISTICS ARE AVAILABLE IN JAN CAPACITOR SPECIFICATION MANUALS
7. THE COMPONENTS USED ABOVE FOR JAN LETTER TYPE DESIGNATIONS ARE:
   CP MICA BUTTON; *CC* CERAMIC; *CM* MICA MOULDED; *CN* PAPER MOULDED

TM CC

Figure 96. Capacitor color codes.

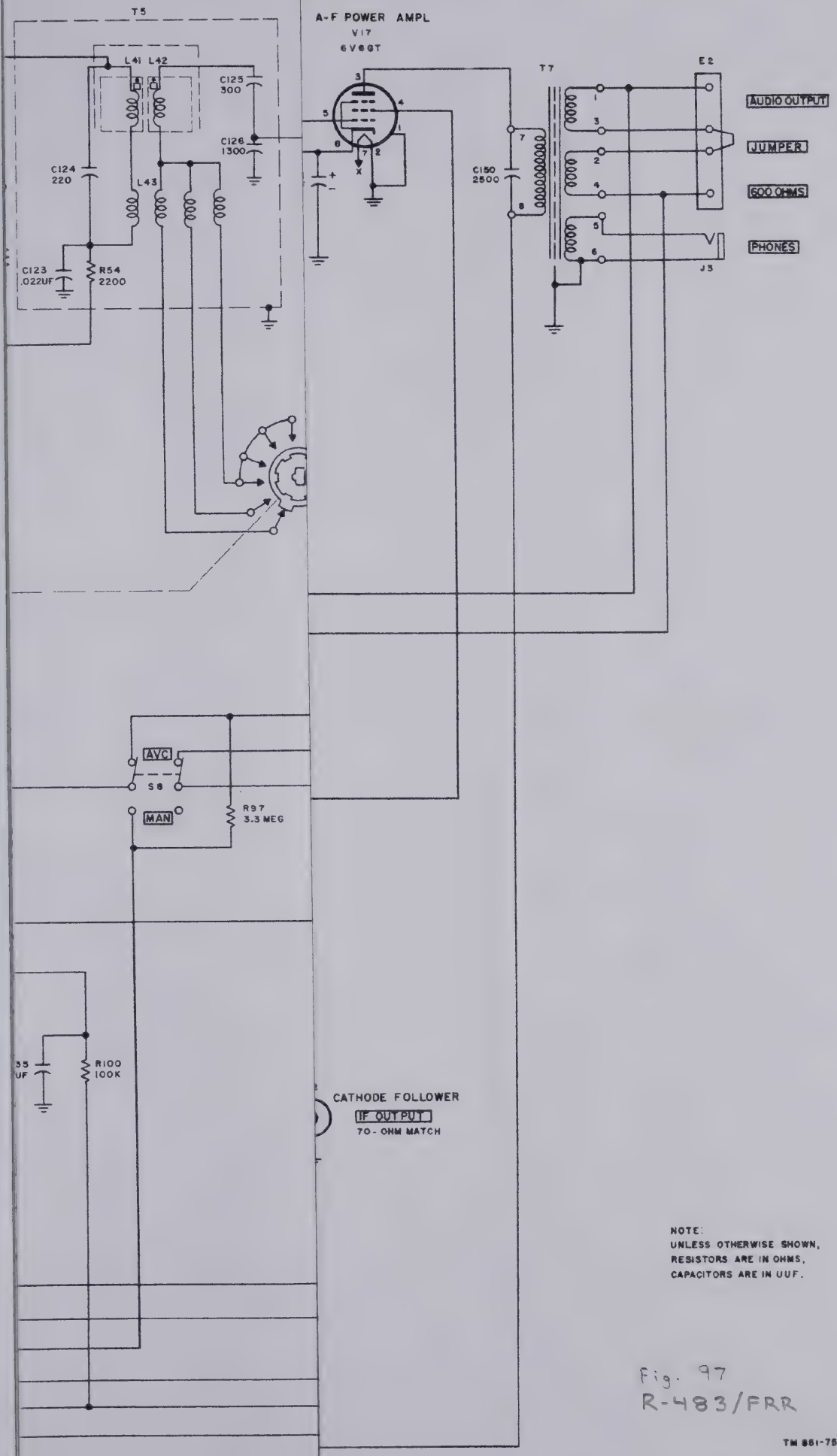

NOTE:
UNLESS OTHERWISE SHOWN,
RESISTORS ARE IN OHMS,
CAPACITORS ARE IN UUF.

Fig. 97
R-483/FRR

TM 881-75

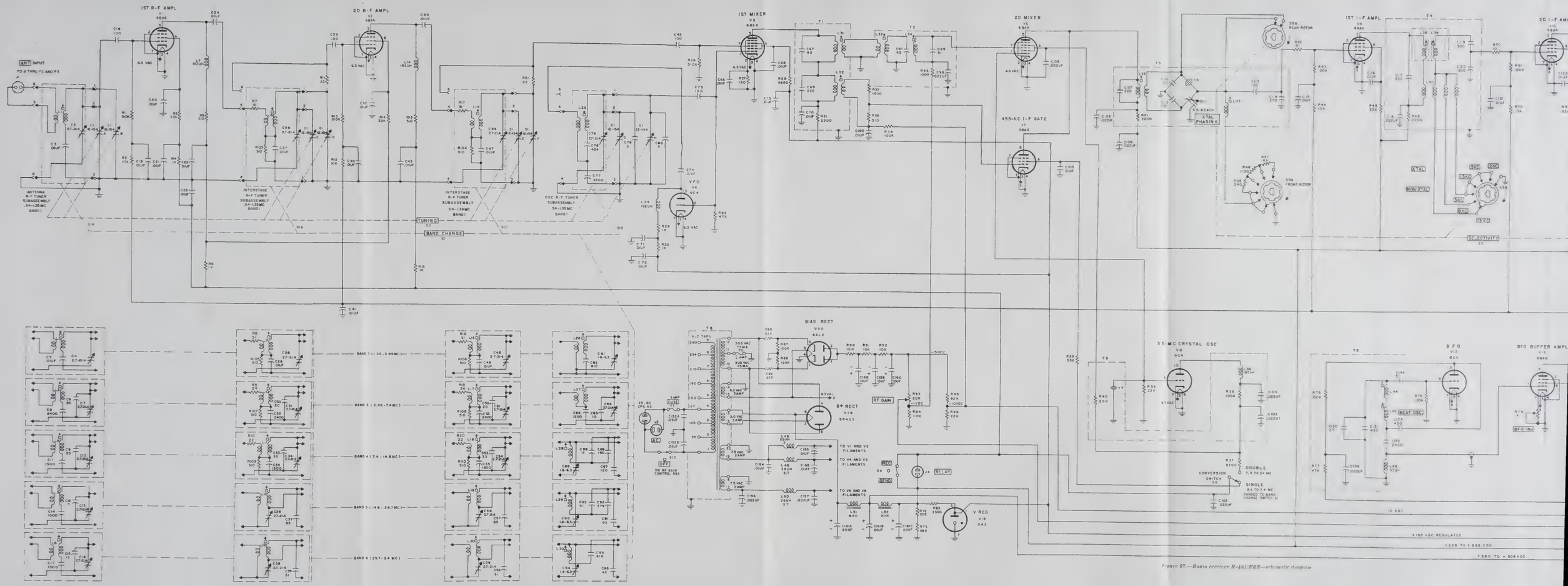

Figure 97.—Radio receiver R-443/PRR—schematic diagram

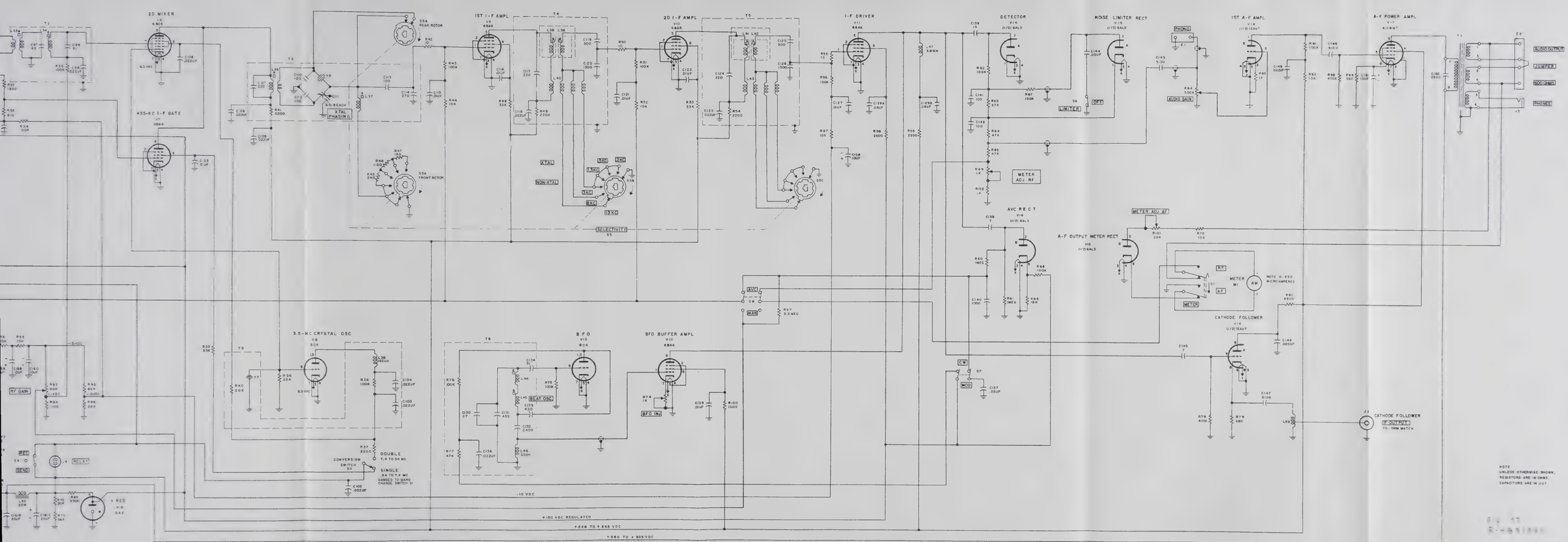

Figure 97.—Radio receiver R-482/PRR—schematic diagram

TM 88-178

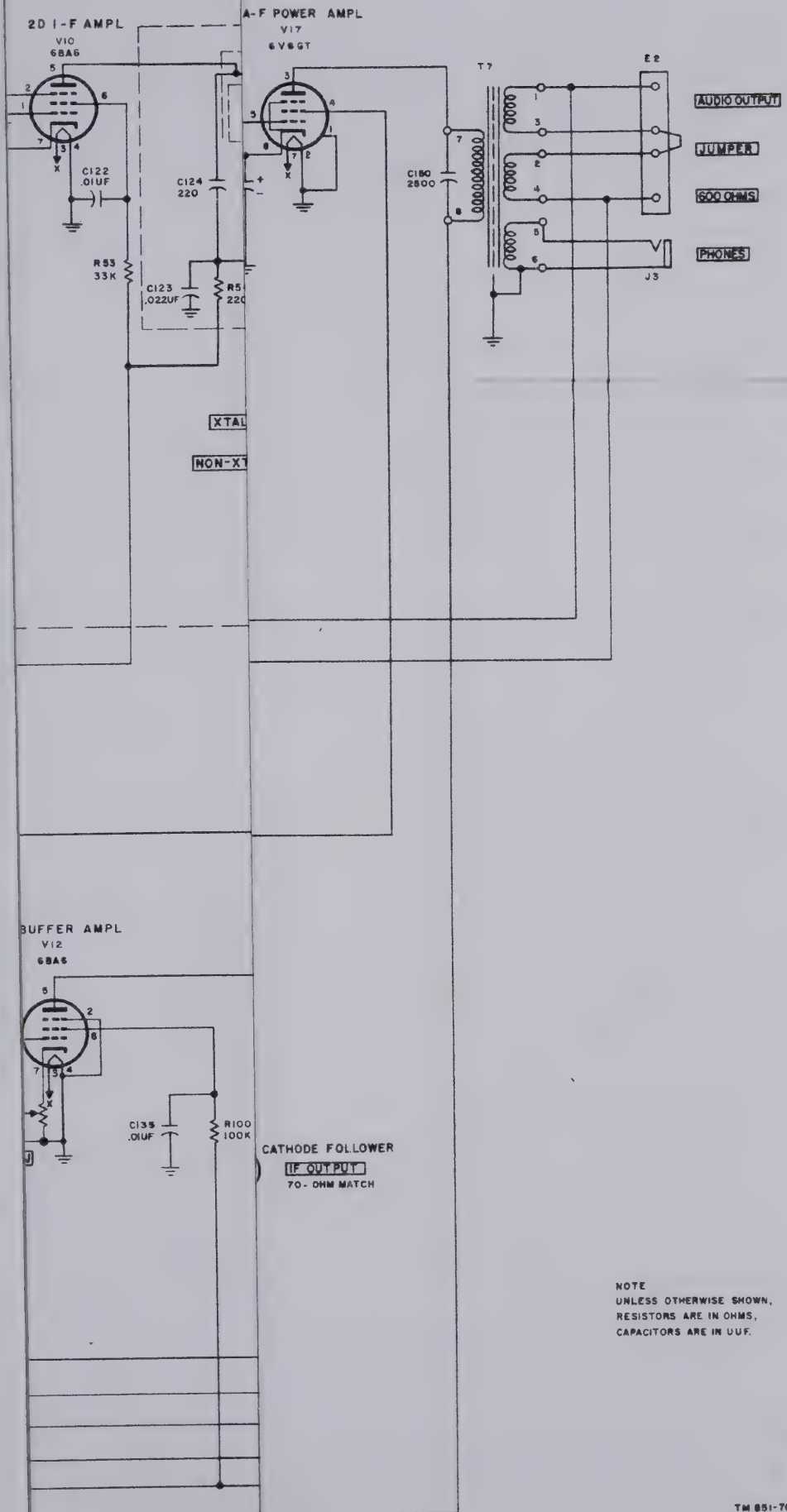

NOTE
UNLESS OTHERWISE SHOWN,
RESISTORS ARE IN OHMS,
CAPACITORS ARE IN UUF.

Fig. 98
R-320A/FRC

275375 O - 53 (Face blank p. 194) No. 2

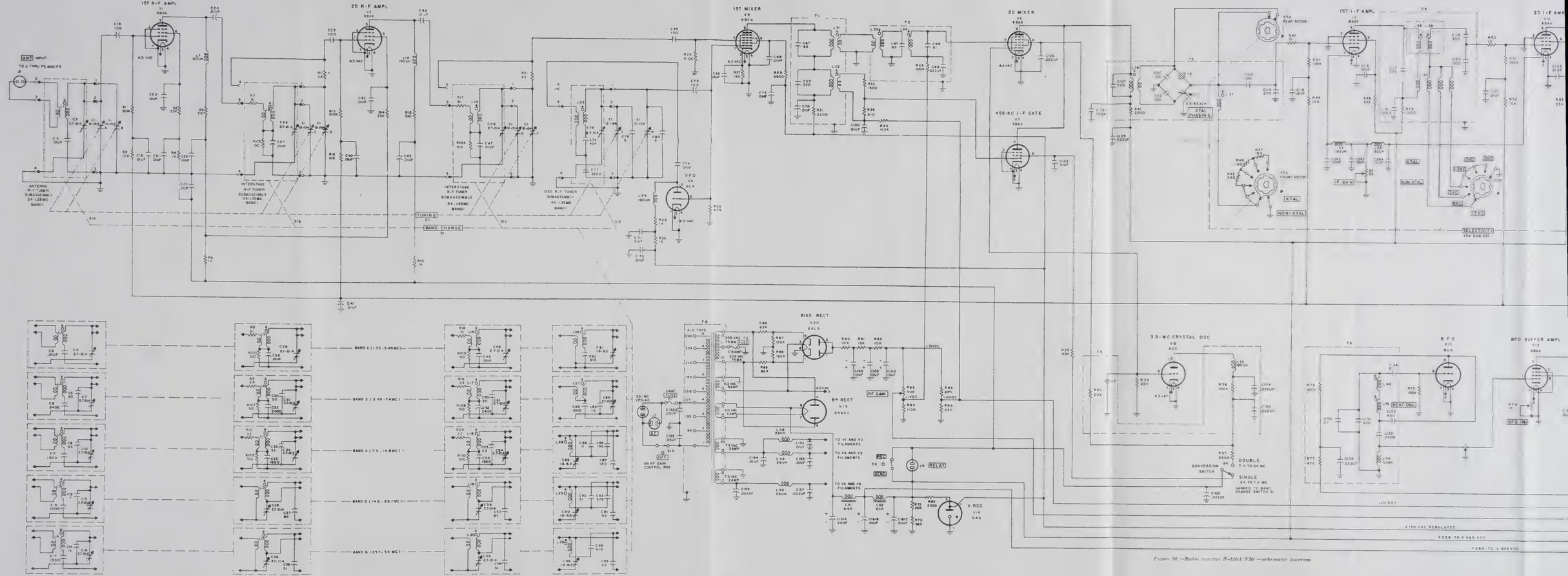

Figure 58.—Radio receiver R-520A/FRR—schematic diagram

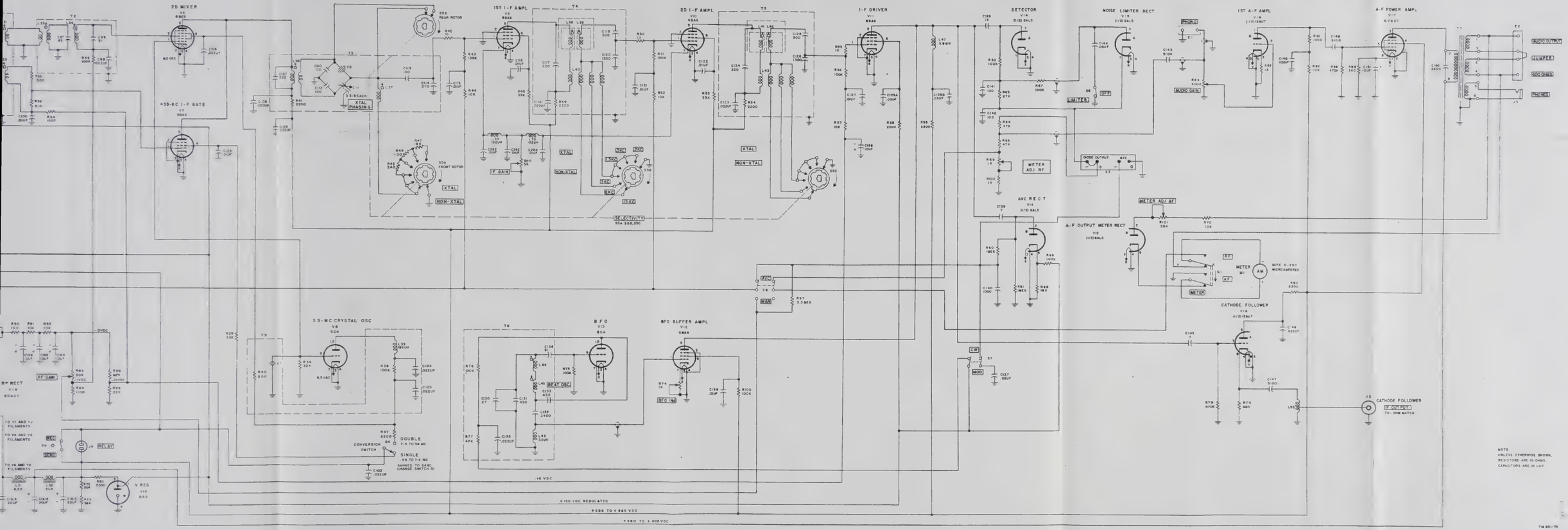

Figure 88.—Radio receiver R-320A/FRC—schematic diagram

NOTE
UNLESS OTHERWISE SHOWN,
RESISTORS ARE IN OHMS
CAPACITORS ARE IN UUF

TM 681-76

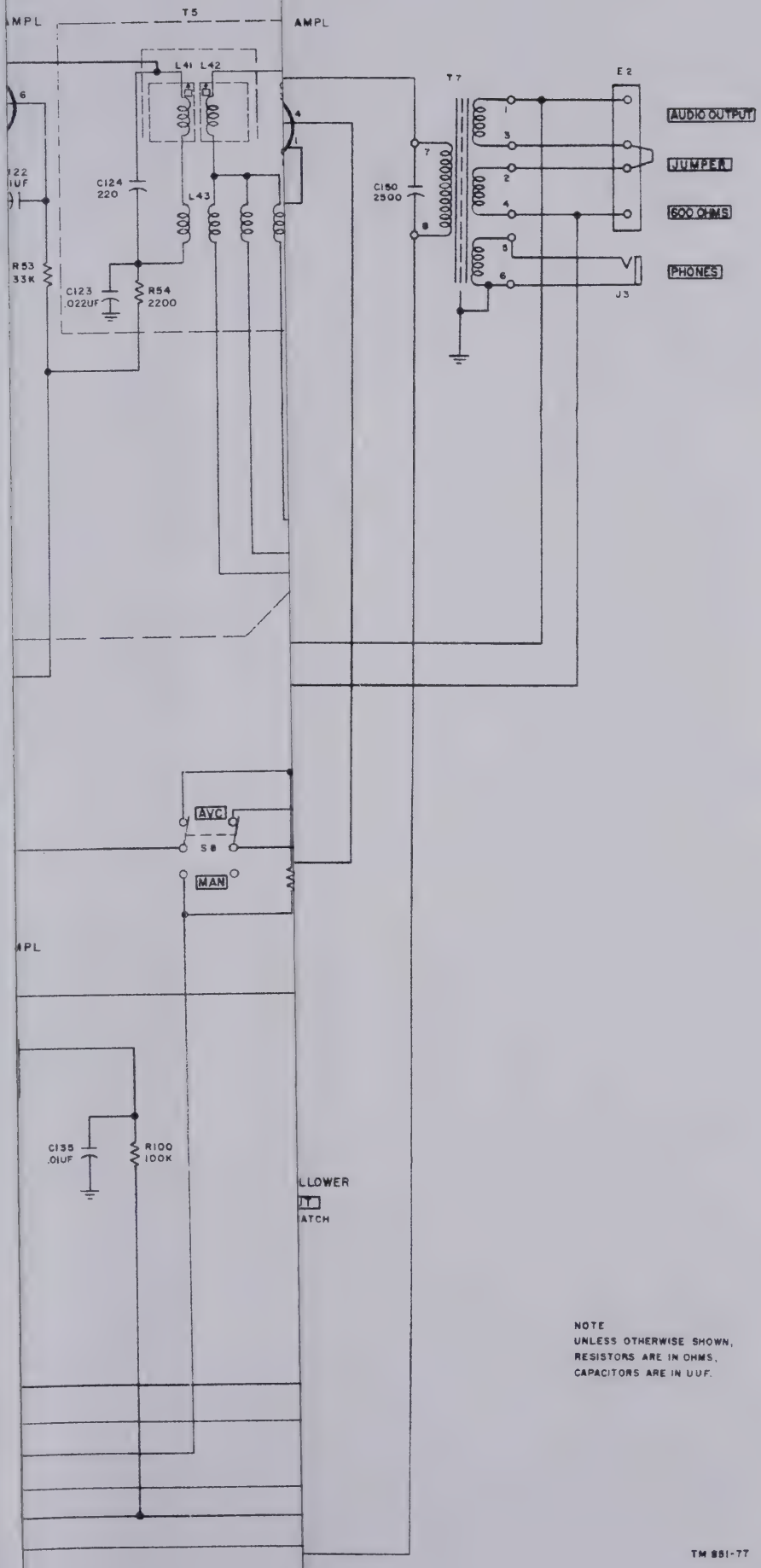

NOTE
UNLESS OTHERWISE SHOWN,
RESISTORS ARE IN OHMS,
CAPACITORS ARE IN UUF.

Fig. 99
R-274A/FRR

TM 9-81-77

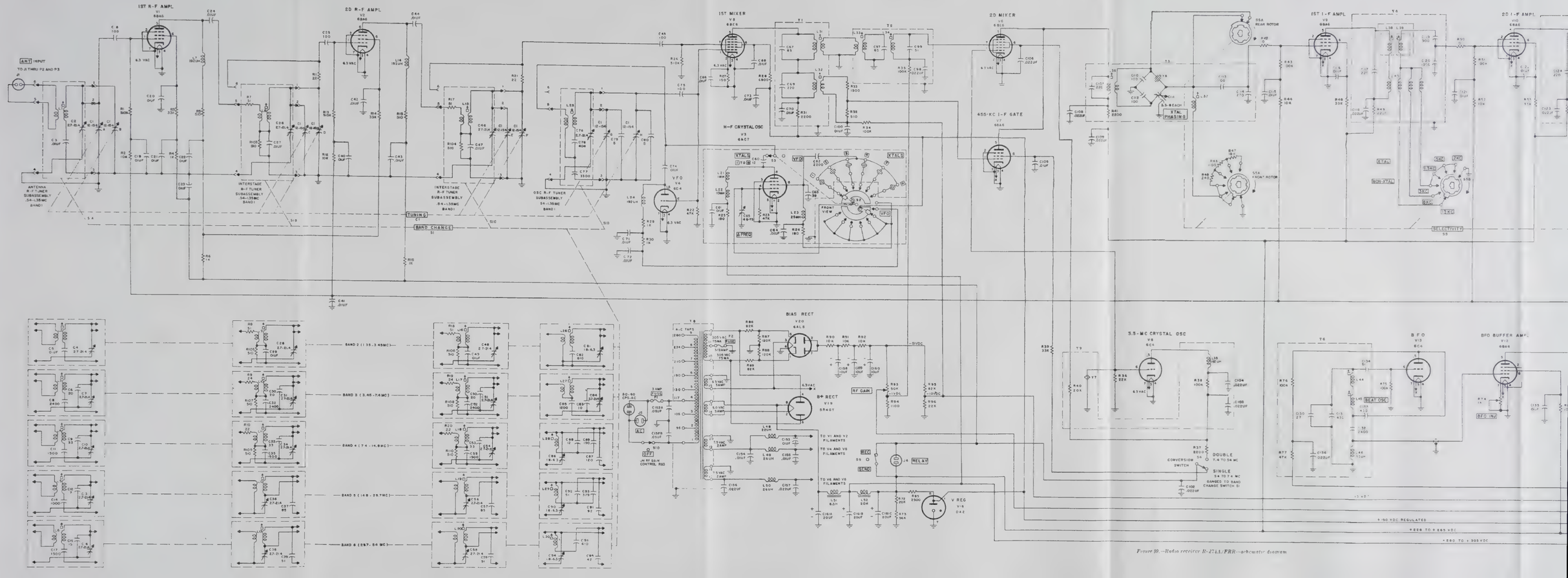

Figure 39.—Radio receiver R-274A/FRR—schematic diagram

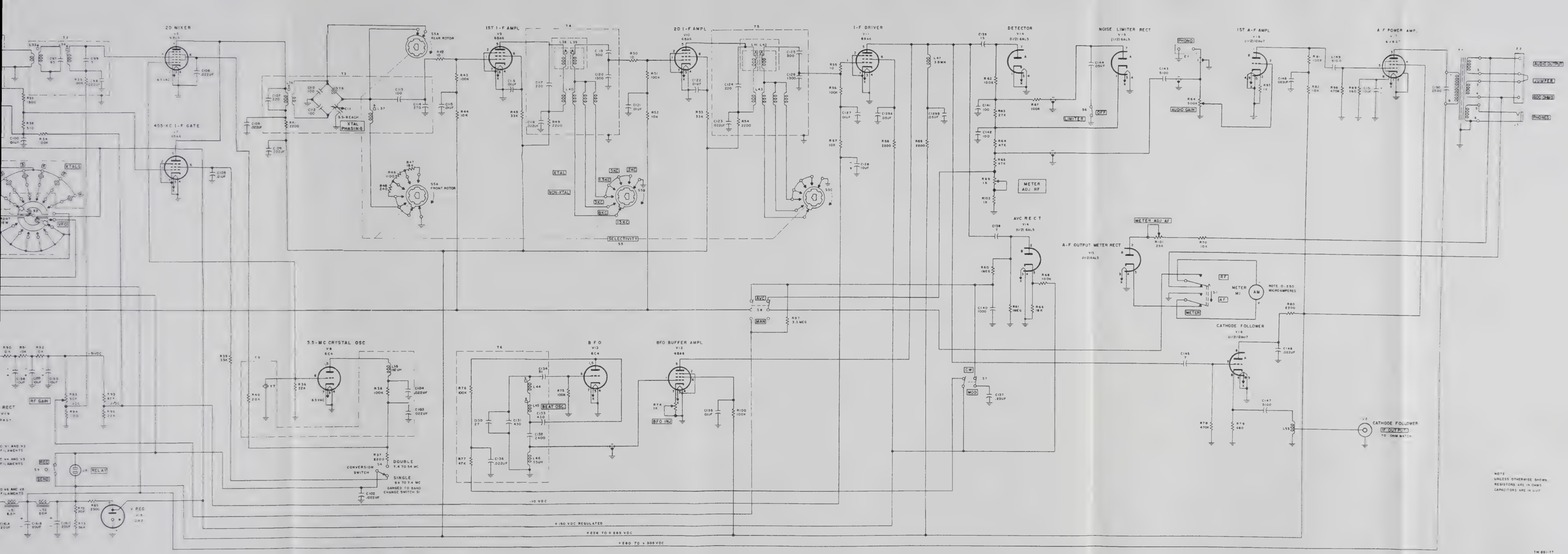

Figure 90.—Radio receiver R-274A/PRR—schematic diagram

TM 881-77

275375 O - 53 (Face blank p. 194) No. 3

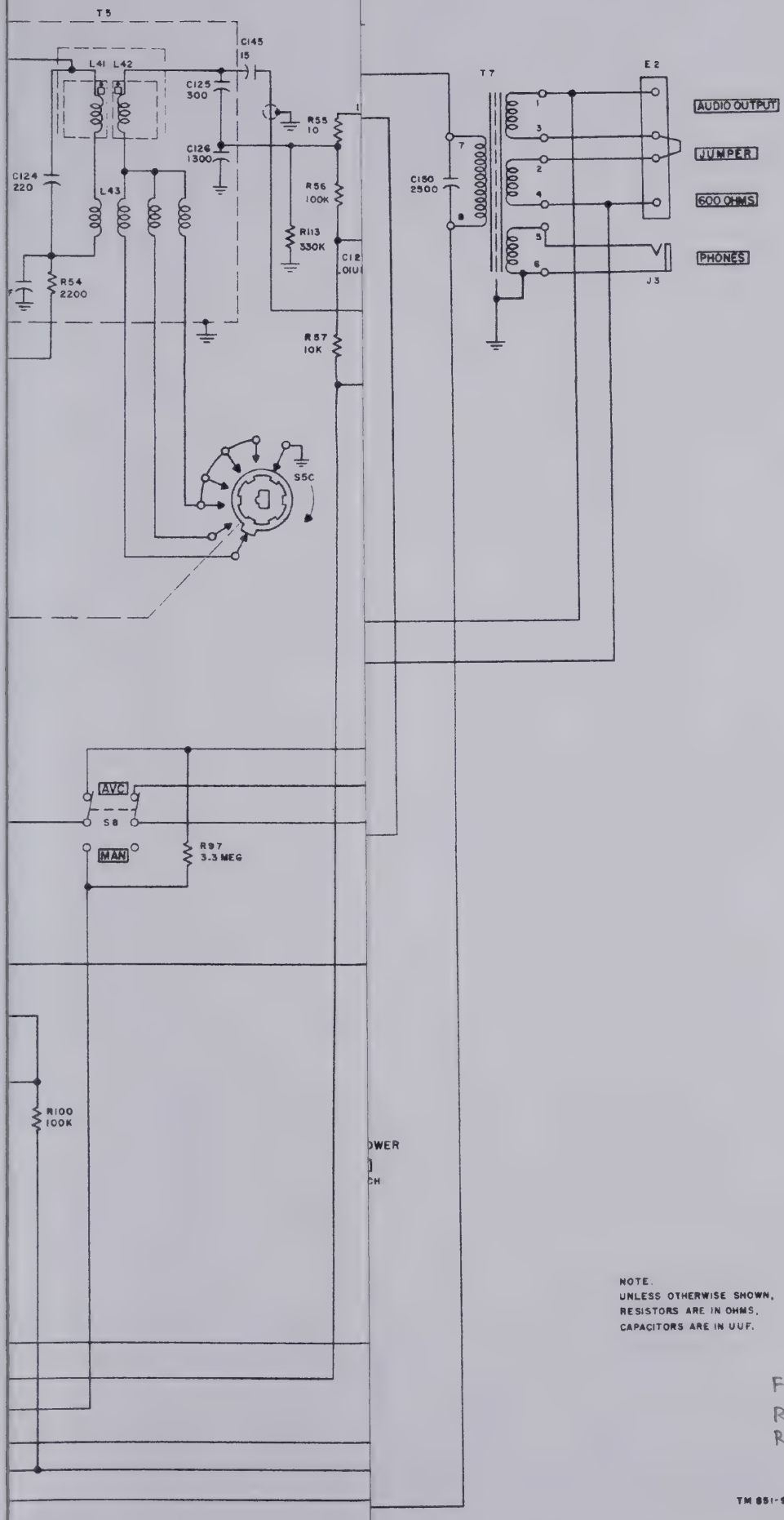

NOTE.
UNLESS OTHERWISE SHOWN,
RESISTORS ARE IN OHMS,
CAPACITORS ARE IN UUF.

Fig. 100
R-274C/FRR Ser Nos 1 thru 486
R-483A/FRR

275375 O - 53 (Face blank p. 194) No. 4

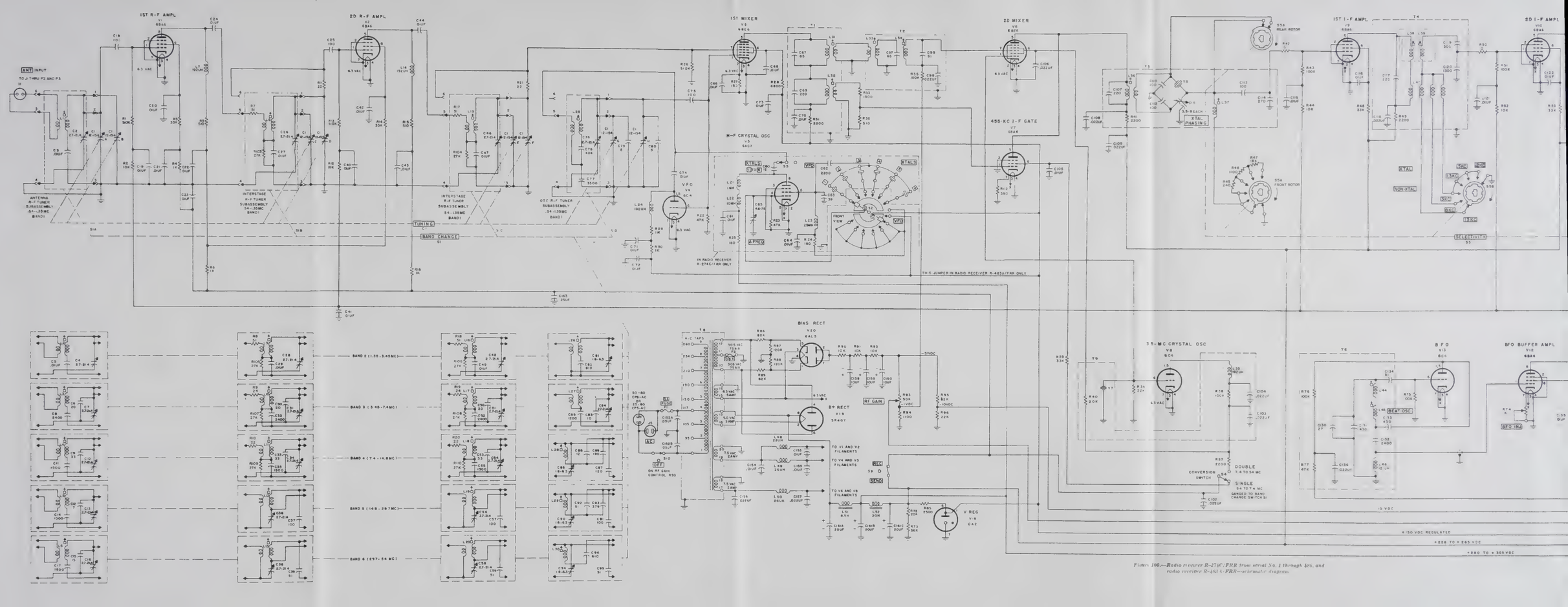

Figure 100.—Radio receiver R-274C/FRR from serial No. 1 through 486, and radio receiver R-483A/FRR—schematic diagram.

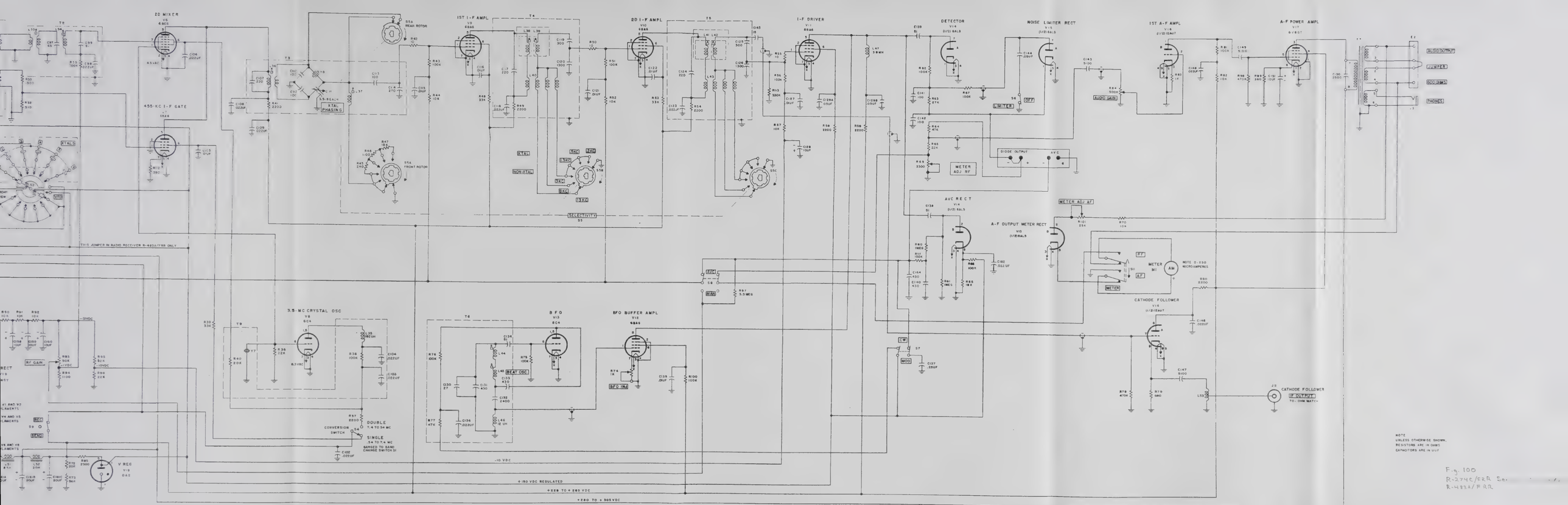
2D MIXER
V6
6BE6
455-KC I-F GATE
V7
6BA6
XTAL
V13
1ST I-F AMPL
V9
6BA6
2D I-F AMPL
V10
6BA6
I-F DRIVER
V11
6BA6
DETECTOR
V14
(1/2) 6AL5
NOISE LIMITER RECT
V15
(1/2) 6AL5
1ST A-F AMPL
V16
(1/2) 12AU7
A-F POWER AMPL
V17
6V6GT
S5a
REAR ROTOR
S5b
FRONT ROTOR
XTAL
PHASING
S3-BFO
S4
SELECTIVITY
S5
XTAL
NON-XTAL
4KC
2KC
1KC
.5KC
.25KC
.1KC
BFO
LIMITER
OFF
DIODE OUTPUT
AVC
METER
ADJ RF
AUDIO GAIN
AVC R E C T
V14
(1/2) 6AL5
A-F OUTPUT METER RECT
V15
(1/2) 6AL5
METER ADJ AF
RF
AF
METER
METER M1
NOTE 0-250 MICROAMPERES
CATHODE FOLLOWER
V16
(1/2) 12AU7
J2
CATHODE FOLLOWER
(IF OUTPUT
70-OHM MATCH)
J1
AUDIO OUTPUT
JUMPER
600 OHMS
PHONES
THIS JUMPER IN RADIO RECEIVER R-274C/FRR ONLY
3.5-MC CRYSTAL OSC
V8
6C4
T9
BFO
V13
6C4
T6
BFO BUFFER AMPL
V12
6BA6
BFO IN
BEAT OSC
DOUBLE
7.4 TO 54 MC
SINGLE
.54 TO 7.4 MC
RANGED TO BAND
CHANGE SWITCH S1
CONVERSION
SWITCH
S4
RF GAIN
CW
MOD
S7
AVC
MAN
S8
V REG
V19
0A2
-10 VDC
+150 VDC REGULATED
+228 TO +265 VDC
+280 TO +305 VDC
-90VDC
-10VDC
6.3VAC
T3
T4
T5
T8
T9
T6
L36 L39
L40
L41 L42
L43
L44
L45
L46
L47 39MH
L48 .25 MICRO
L49 .25 MICRO
L50 2500
L51 2.5MH
L52 2.5MH
L53 2.5MH
S1
S2
S3
S4
S5
S6
S7
S8
S9
J1
J2
J3
J4
J5
J6
J7
J8
J9
J10
J11
J12
J13
J14
J15
J16
J17
J18
J19
J20
J21
J22
J23
J24
J25
J26
J27
J28
J29
J30
J31
J32
J33
J34
J35
J36
J37
J38
J39
J40

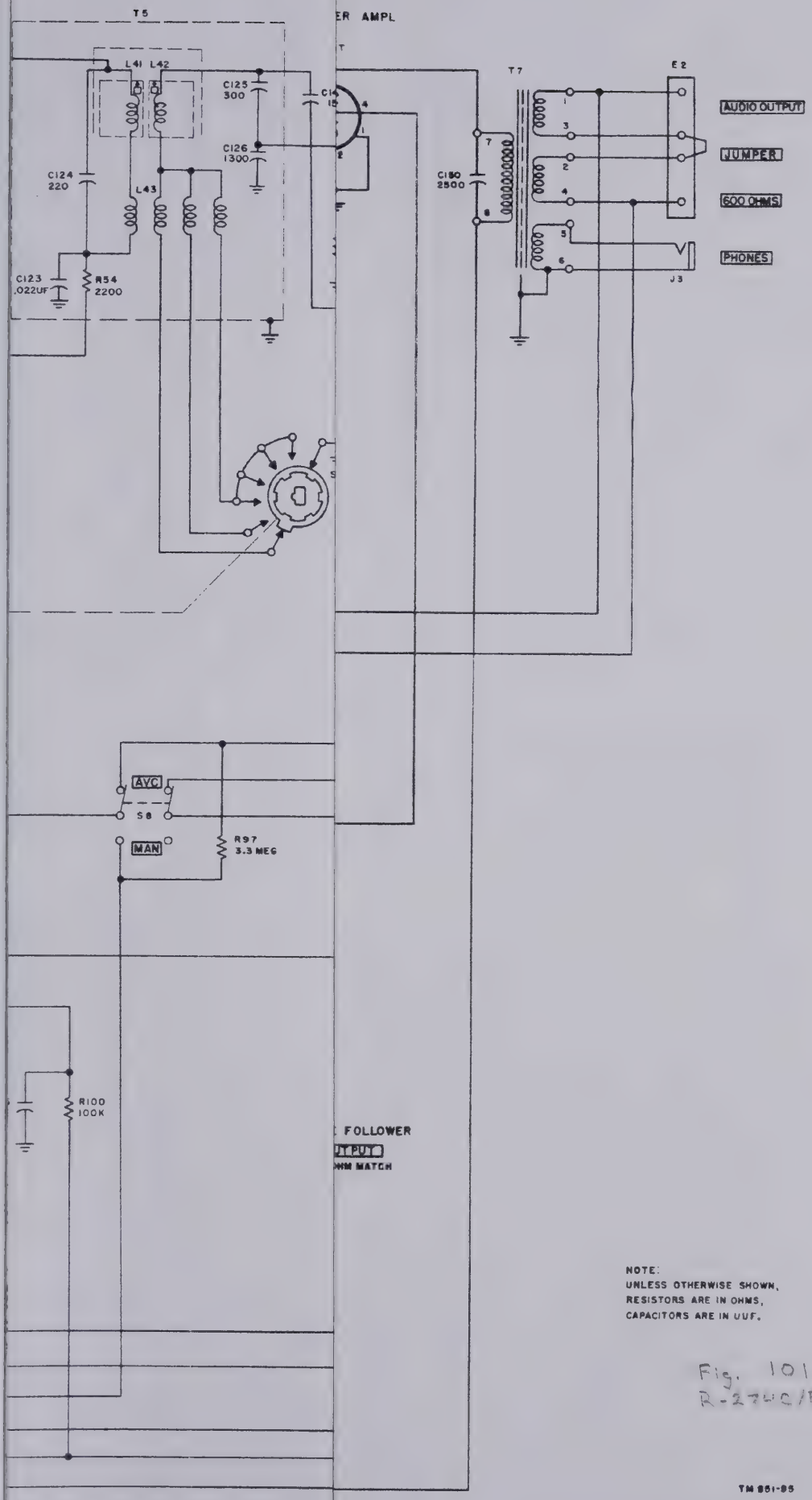

NOTE:
UNLESS OTHERWISE SHOWN,
RESISTORS ARE IN OHMS,
CAPACITORS ARE IN UUF.

Fig. 101
R-274C/FRR Ser No 487 thru 1569

275375 O - 53 (Face blank p. 194) No. 5

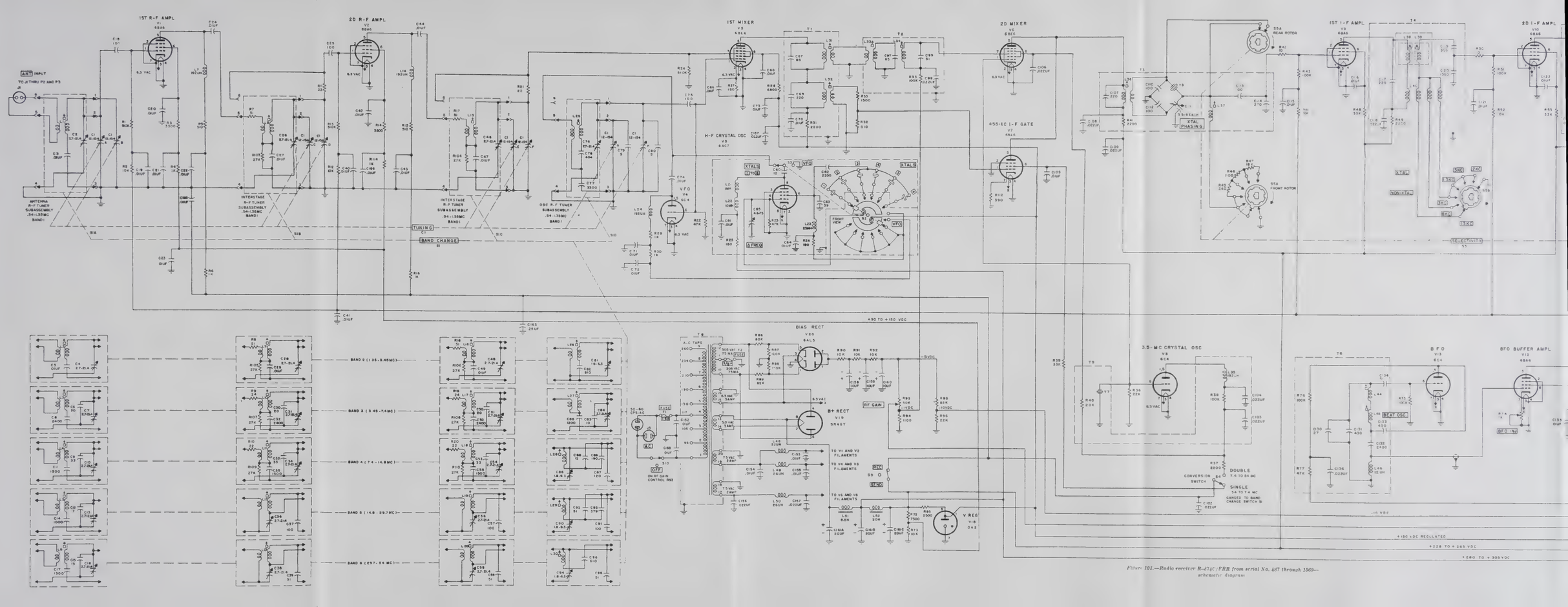

Figure 101.—Radio receiver R-274C/FRR from serial No. 487 through 1569—schematic diagram

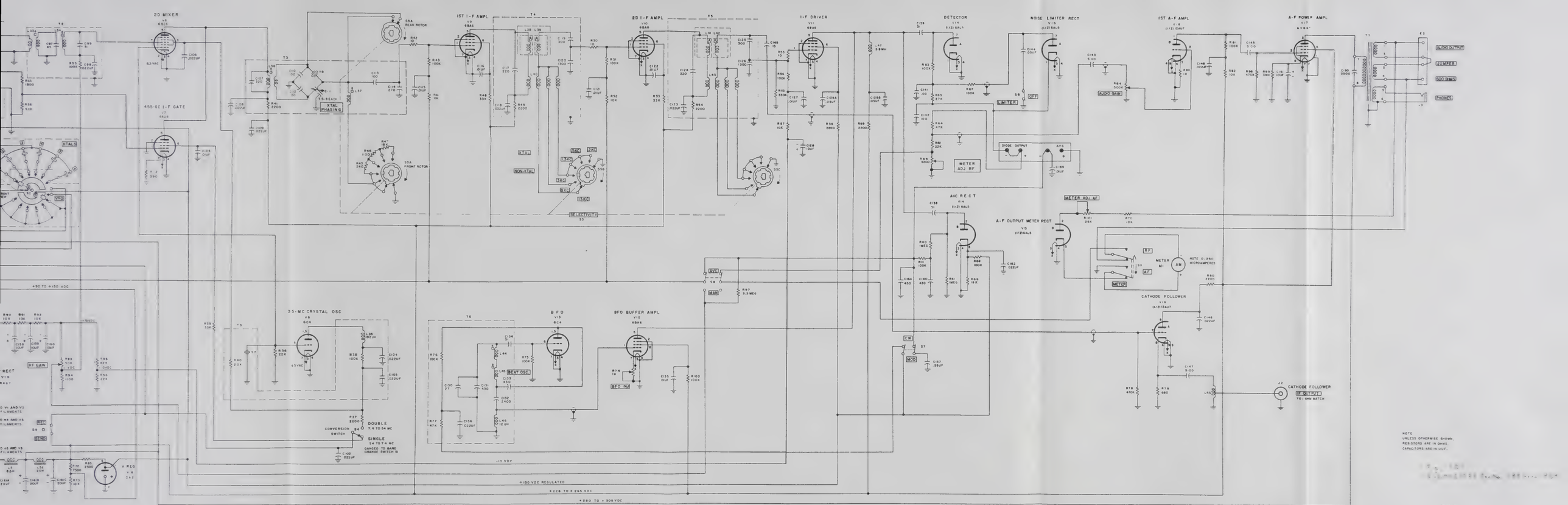

Figure 101.—Radio receiver R-274C/FRR from serial No. 487 through 1569—schematic diagram.

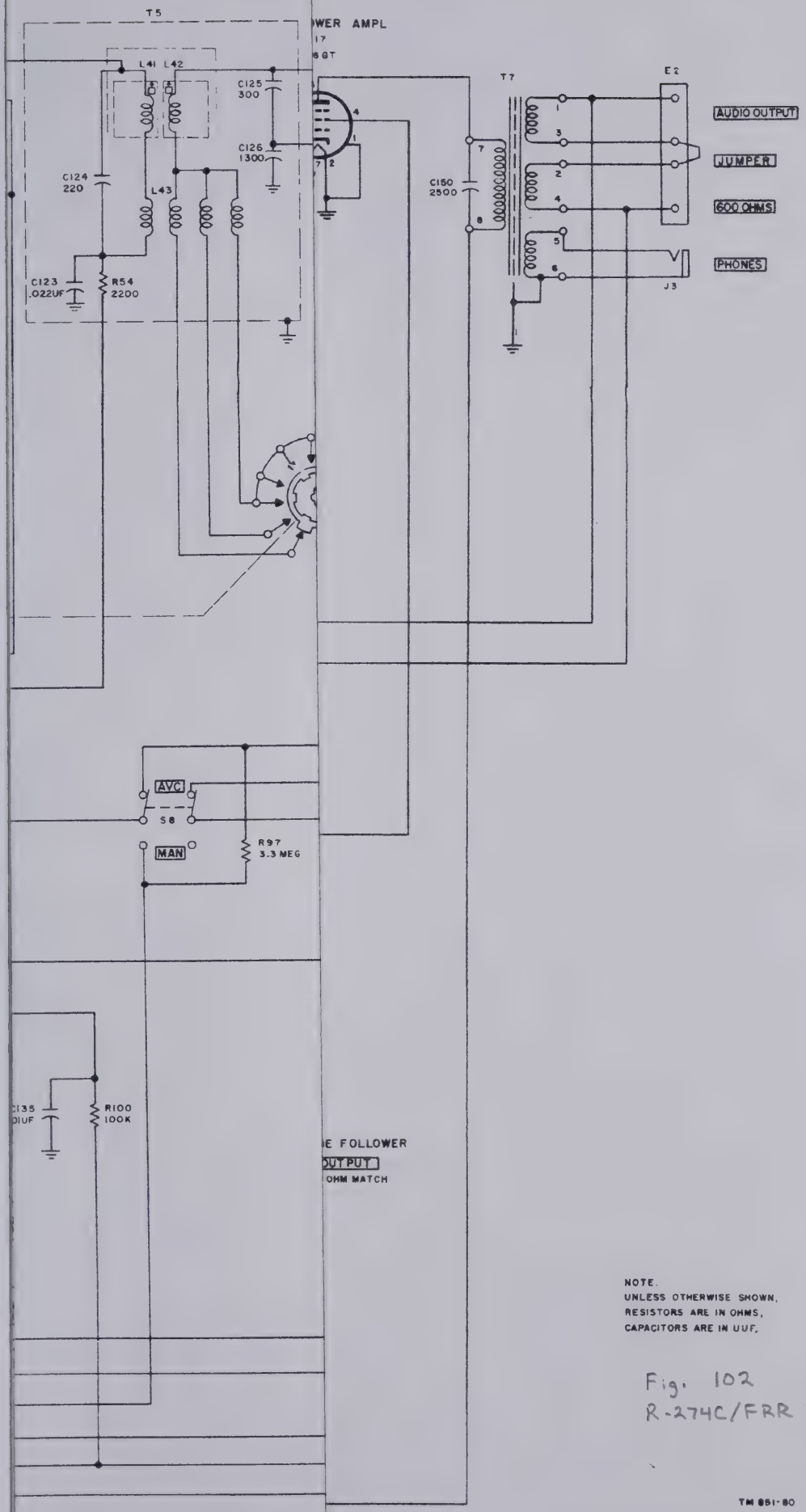

NOTE.
UNLESS OTHERWISE SHOWN,
RESISTORS ARE IN OHMS,
CAPACITORS ARE IN UUF.

Fig. 102
R-274C/FRR Ser. No. 1570 & higher

275375 O - 53 (Face blank p. 194) No. 6

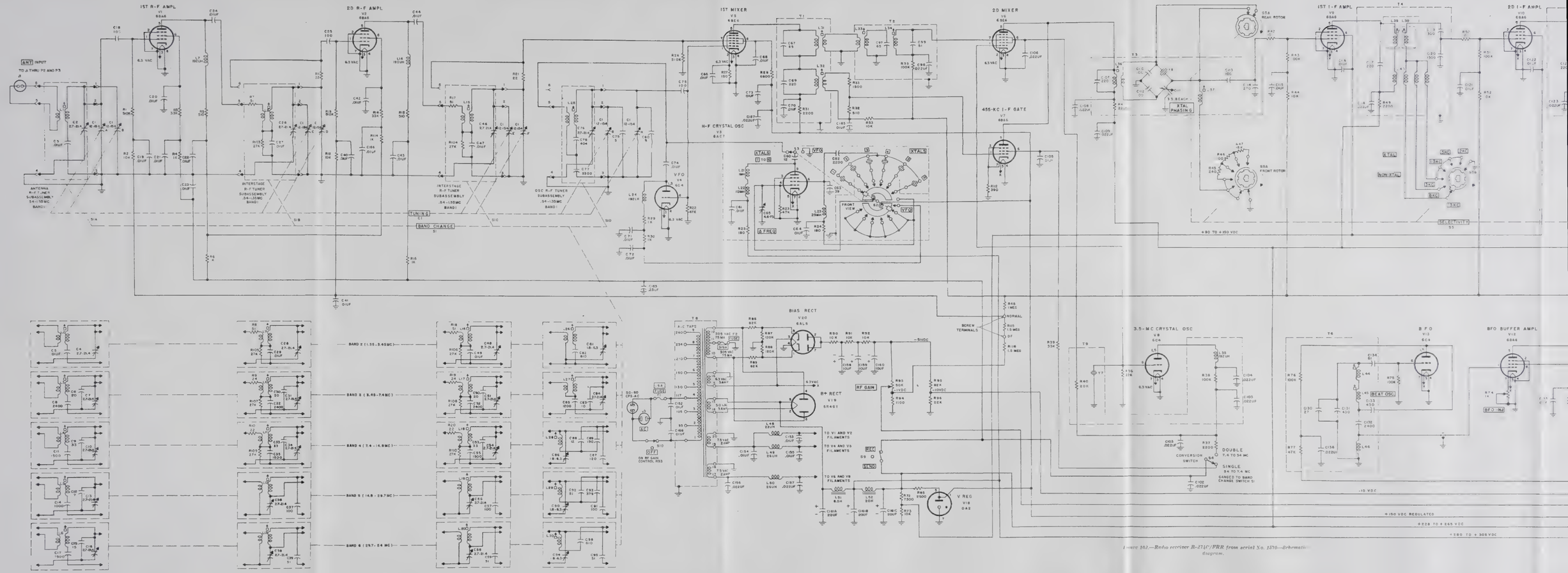

Figure 102.—Radio receiver R-274C/FRR from serial No. 1570—Schematic diagram.

Figure 102.—Radio receiver R-274C/FRR from serial No. 1570—Schematic diagram.

275375 O - 53 (Face blank p. 194) No. 6

INDEX

	Paragraph	Page
Additional equipment	16	20
Adjustment:		
In the presence of noise:		
C-w reception	30*a*	36
Mcw reception	29*a*	35
Main tuning capacitor drive link and spring	92	146
Alinement:		
Beat-frequency oscillator	96	151
455 kc i-f	95	149
R-f and v-f oscillator procedure	98	152
Subsequent to i-f transformer or bfo subassembly replacement	101	154
Subsequent to r-f tuner subassembly replacement	100	153
Subsequent to tube replacement	99	153
Test instruments	93	147
3955 i-f	97	151
Antenna:		
Tool	93	147
Doublet	23	26
Straight wire	23*i*, 54*a*	28, 56
Application:		
Equipment	3	7
System	4	7
Assembly:		
Differences in receiver chassis and panel assemblies	8*a*	12
Gear train	91*d*	143
Tuning unit	91*e*	146
Block diagram outline	53	53
Calibration, signal generator	94	149
Characteristics, technical	5	10
Checklist; equipment performance	51	48
Cleaning:		
Gear-train assembly	91*c*	142
Mechanical parts	91	141
Components, Radio Set SCR–244–D	7	12
Connections, Radio Set SCR–244–D	25	28
Controls, Radio Receiver, all types	27	32
Data:		
Technical	5	10
Packaging	6	11
Demolition:		
General	122	160
Methods of destruction	123	160
Description:		
General	8	12
Minor components of Radio Set SCR–244–D	14	19
Radio Receiver R–274A/FRR	10	13
Radio Receiver R–274C/FRR	12	18
Radio Receiver R–320A/FRC	11	18
Radio Receiver R–483A/FRR	13	19
Radio Receiver R–483/FRR	9	13
Running spares	15	19

	Paragraph	Page
Disassembly:		
Gear train	91*b*	141
Shipment and limited storage	120	160
Tuning unit	91*a*	141
Equipment:		
Differences:		
Radio Receivers R–274A/FRR and R–274C/FRR	18	21
Radio Receivers R–483/FRR and R–483A/FRR	20	23
Radio Receivers R–483/FRR, R–274A/FRR, and R–320A/FRC	17	20
Radio Receiver R–274C/FRR	19	22
Performance checklist	52	49
Troubleshooting, test	78	90
Forms:		
General	2	7
Maintenance	41	42
Inspection, visual	49	47
Installation:		
Antenna components, Radio Set SCR–244–D	23	26
Radio Receiver, all types	24	28
Straight wire antenna	54*a*	56
Unpacking new equipment	22	24
Lubrication	43	46
By manufacturer	44	46
Gear-train assembly	91*c*	142
Mechanical parts	91	141
Under unusual conditions	45	46
Arctic regions	45*a*	46
Desert regions	45*c*	46
Tropical regions	45*b*	46
Maintenance:		
Field:		
Component sectionalization and localization	76*b*	88
Data	77	89
System sectionalization	76*a*	88
Troubleshooting procedures	76	88
Organizational:		
Materials supplied	37*b*	41
Preventive:		
Definition	39	41
Forms	41	42
Performing	42	42
Techniques	40	39
Tools supplied	37*a*	41
Weatherproofing	46	47
Materials, organizational, supplied	37*b*	41
Operation:		
C-w reception	30	36
MCW reception	29	35
Starting procedure	28	32
Stopping procedure	32	39

	Paragraph	Page
Operation—Continued		
Usual	28	32
Unusual:		
Arctic climates	34	39
Desert climates	36	39
General	33	39
Tropical climates	35	39
Packaging:		
Data	6	11
Painting	47	47
Reassembly, gear-train assembly	91*d*	143
Reception:		
C-w frequency-shift signals	30	36
Mcw or voice	29	35
References	App. I	161
Repairs	90	131
Replacement, cleaning, and lubrication of mechanical parts	91	141
Resistance, d-c, transformers and coils	83	120
Rustproofing and painting	47	47
Service:		
Troubleshooting precautions	79	90
Used or reconditioned equipment	26	31
Shipment and limited storage:		
Disassembly	120	160
Repacking	121	160
Signal substitution:		
A-f tests	86	122
I-f tests	87	124
Notes	85	122
R-f tests	88	128
Siting requirements	21	24
Spares, running	15	19
Stage analysis: Radio Receiver, all types	54–75	56–85
Stage gain	89	130
Strip, r-f, troubleshooting	84	122
Test equipment:		
Alinement	93	147
Final testing	103	154
Troubleshooting	78	90
Tests:		
Audio fidelity	117	159
Automatic volume control test	114	157
Calibration accuracy	115	158
C-w performance	111	157
455 kc i-f rejection ratio	110	157
Heterodyne interference attenuation	113	157
Image rejection ratio	108	156
Operational	81	92
Overall distortion	118, 120	159, 160
Overall fidelity	116	158
Rated cathode follower output	107	156
Rated power output	106	156
Selectivity	105	154
Sensitivity	104	154
Sensitivity, c-w signal	112	157
Tests—Continued		
Signal substitution:		
A-f	86	122
I-f	87	124
R-f	88	128
3,955-kc i-f rejection ratio	110	157
Theory:		
Block diagram	53	53
Radio Receiver, all types	50–75	48–85
A-f output meter rectifier V15B	74	85
A-f power amplifier stage V17	73	84
Avc rectifier V14B	70	80
Beat-frequency oscillator V13	66	75
Bfo buffer amplifier V12	67	77
Cathode follower V16A	69	78
Detector V14A	68	77
First a-f amplifier stage V16A	72	82
First i-f amplifier stage V9	63	71
First mixer V5	58	64
First r-f amplifier stage V1	54	56
455-kc i-f gate V7	59	66
H-f crystal oscillator V3	57	63
I-f filter circuit	62	70
Noise limiter rectifier V15A	71	82
Second i-f amplifier stage V10	64	74
Second mixer stage V6	61	69
Second r-f amplifier stage V2	55	61
Power supply V18, V19, V20	75	85
3.5-mc crystal oscillator V8	60	68
Variable-frequency oscillator V4	56	61
Tools, organizational:		
Special	38	41
Supplied	37	41
Troubleshooting:		
Field:		
Chart	82	92
Checking bias and B–1 circuits for shorts	80	90
Data	70	80
D-c resistance of transformers and coils	77	89
General precautions	83	120
Operational test	79	90
Procedures	81	92
System sectionalization	76	88
Organizational:	76*a*	88
Equipment performance checklist	51	48
Scope	48	47
System sectionalization to a component	50	48
Visual inspection	49	47
R-f strip	81	122
Signal substitution:		
A-f tests	86	122
I-f tests	87	124
Notes	85	122
R-f tests	88	128
Unpacking, new equipment	22	24
Weatherproofing	46	47

By order of the Secretary of the Army:

M. B. RIDGWAY,
General, United States Army,
Chief of Staff.

Official:

WM. E. BERGIN,
Major General, United States Army,
The Adjutant General.

Distribution:

Active Army:

Tech Svc (1); Tech Svc Bd (1); AFF Bd (ea Svc Test Sec) (1); AFF (5); AA Comd (2); OS Maj Comd (5); Base Comd (5); MDW (2); Log Comd (5); A (5); CHQ (2); FT (2); Sch (5) except 11 (25); Gen Dep (2); Dep 11 (20) except Sig Sec, Gen Dep (10); Tng Div (2); POE (10), OSD (2); Lab 11 (5); Mil Dist (3); Field Maint Shops 11 (3); Two (2) copies to each of the following T/O & E's: 11–107; 11–127A; 11–128; 11–500A, CA, CB, CC, CD, EA–ET; 11–587; 11–592; 11–597; 32–500, AA through AC.

NG: Same as Active Army except one copy to each unit.

Army Reserve: Same as Active Army except one copy to each unit.

For explanation of distribution formula, see SR 310–90–1.

U. S. GOVERNMENT PRINTING OFFICE: 1953